## 1 FEATURES

- Miniature package
- Low noise
- Low bias instability
- Excellent performance in vibration and shock environments
- 1, 2 or 3 axes offered in same package
  - Electronically calibrated axis alignment
- Single-crystal silicon technology
  - No intrinsic wear-out effects
- Insensitive to magnetic fields
- Full EMI compliance
- Digital interface, RS422
- Fully configurable:
  - 5 different sample rates
  - 5 different bandwidths
  - LP filter -3dB frequency can be set individually for each axis
  - RS422 protocol, bit-rate and line termination
  - Selectable output unit: angular rate [deg/s], incremental angle [deg], average angular rate [deg/s] or integrated angle [°]
- External Trigger input and Time Of Validity output to enable synchronization
- Continuous self-diagnostics
- RoHS compatible

(38.6mm x 44.8mm x 21.5mm)

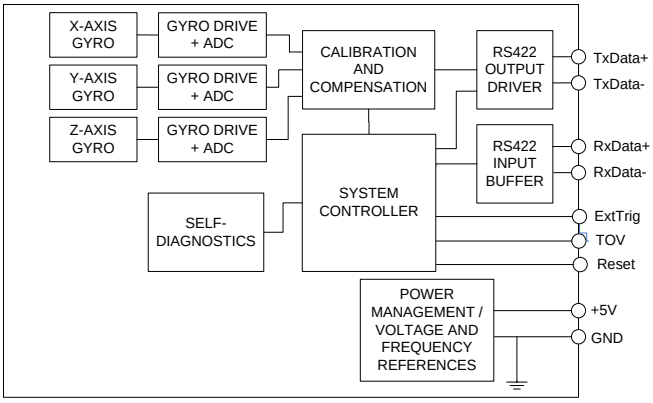


**Figure 2-1: STIM210 FUNCTION BLOCK DIAGRAM**

## 2 GENERAL DESCRIPTION

STIM210 is a cluster of 1, 2 or 3 high accuracy MEMS-based gyros in a miniature package. Any configuration of axes can be provided. Each axis is factory-calibrated for bias, sensitivity and compensated for temperature effects to provide high-accuracy measurements in the temperature range -40°C to +85°C. The unit runs off a single +5V supply.

STIM210 communicates via a standard high-level RS422 interface. The use of a 32 bit RISC ARM microcontroller provides flexibility in the configuration, like choice of output unit, sample rate, LP filter -3dB frequency and RS422 bit-rate and protocol parameters. All configurable parameters can be defined when ordering or set by customer.

When STIM210 is powered up, it will perform an internal system check and synchronise the gyros. As an acknowledgement of the complete power-up sequence, it will provide special datagrams containing data, like part number, serial number, number of active axis and configuration parameters as mentioned above. STIM210 will then automatically proceed to provide measurement data. Connect power and STIM210 will provide accurate gyro measurements over the RS422 interface without any interaction with the device.

The measurement data is transmitted as packages of data on a fixed format (datagram) at intervals given by the sample rate. The datagram is in binary coded format in order to have an efficient transfer of data. In addition to the measurement data itself, the datagram contains an identifier, a status byte and a CRC (Cyclic Redundancy Check) byte to provide high degree of fault detection in the transmissions. The status byte will flag any detected errors in the system.

For more advanced users, the gyro may be put in Service Mode. In this mode all the configuration parameters can be intermediately or permanently changed by overwriting the current settings in the flash memory. In Service Mode the commands and responses are in a human readable format; to enable the use of terminal-type software during typical product integration. Service Mode also provides the ability to perform single measurements, perform diagnostics and obtain a higher detail level of detected errors reported in the status byte.

**Sensonor AS**
Phone: +47 3303 5000 - Fax: +47 3303 5005
sales@sensonor.com www.sensonor.com

## 3 TABLE OF CONTENTS

1 FEATURES ..... 1
2 GENERAL DESCRIPTION ..... 1
3 TABLE OF CONTENTS ..... 2
4 DEFINITIONS AND ABBREVIATIONS USED IN DOCUMENT ..... 3
4.1 Definitions ..... 3
4.2 Abbreviations ..... 3
5 ABSOLUTE MAXIMUM RATINGS ..... 3
6 SPECIFICATIONS ..... 3
6.1 TYPICAL PERFORMANCE CHARACTERISTICS ..... 7
6.1.1 Root Allan Variance ..... 7
6.1.2 Initial bias drift ..... 7
6.1.3 Bias drift over temperature ..... 8
6.1.4 Frequency characteristics ..... 9
6.2 Configurable parameters ..... 11
6.3 Datagram specifications ..... 12
6.4 Status byte ..... 16
7 MECHANICAL ..... 17
7.1 Mechanical dimensions ..... 17
7.2 Advice on mounting orientation ..... 18
7.3 Pin configuration ..... 18
7.4 Definition of axes ..... 18
8 BASIC OPERATION ..... 19
8.1 Reset ..... 19
8.2 External Trigger ..... 20
8.3 Time of Validity (TOV) ..... 21
8.4 Operating modes ..... 22
8.4.1 Init Mode ..... 22
8.4.2 Normal Mode ..... 22
8.4.3 Service Mode ..... 26
8.5 Self diagnostics ..... 26
9 COMMANDS IN NORMAL MODE ..... 27
9.1 N (PART NUMBER DATAGRAM) command ..... 27
9.2 I (SERIAL NUMBER DATAGRAM) command ..... 27
9.3 C (CONFIGURATION DATAGRAM) command ..... 28
9.4 E (EXTENDED ERROR INFORMATION DATAGRAM) command ..... 28
9.5 R (RESET) command ..... 28
9.6 SERVICEMODE command ..... 29
10 COMMANDS IN SERVICE MODE ..... 30
10.1 i (INFORMATION) command ..... 31
10.2 a (SINGLE-SHOT MEASUREMENT) command ..... 34
10.3 c (DIAGNOSTIC) command ..... 35
10.4 d (DATAGRAM FORMAT) command ..... 37
10.5 t (TRANSMISSION PARAMETERS) command ..... 38
10.6 r (TERMINATION) command ..... 40
10.7 u (OUTPUT UNIT) command ..... 41
10.8 f (LP FILTER -3dB FREQUENCY) command ..... 42
10.9 m (SAMPLE RATE) command ..... 43
10.10 s (SAVE) command ..... 44
10.11 x (EXIT) command ..... 45
10.12 z (RESTORE TO FACTORY SETTINGS) command ..... 46
10.13 ? (HELP) command ..... 48
11 MARKING ..... 51
12 PART NUMBER / ORDERING INFORMATION ..... 51

# 4 DEFINITIONS AND ABBREVIATIONS USED IN DOCUMENT

## 4.1 Definitions

1g = 9.80665m/s$^2$

## 4.2 Abbreviations

**Table 4-1: Abbreviations**

| ABBREVIATION | FULL NAME |
|---|---|
| BSL | Best Straight Line |
| CIC-filter | Cascaded Integrator Comb filter |
| CR | Carriage Return |
| FS | Full-Scale |
| LF | Line Feed |
| LP filter | Low-Pass filter |
| lsb | Least significant bit |
| LSB | Least Significant Byte |
| MSB | Most Significant Byte |
| tbd | to be defined |
| TOV | Time Of Validity |

# 5 ABSOLUTE MAXIMUM RATINGS

Stresses beyond those listed in Table 5-1 may cause permanent damage to the device.
Exposure to any Absolute Maximum Rating condition for extended periods may affect device reliability and lifetime.

**Table 5-1: Absolute maximum ratings**

| Parameter | Rating | Comment |
|---|---|---|
| Mechanical shock | 1 500g/0.5ms half-sine | Any direction. Ref: MIL STD-883G |
| ESD human body model | ±2kV | Ref: JEDEC/ESDA JS-001 |
| Storage temperature | -55°C to +90°C | Up to 1000 hours |
| VSUP to GND | -0.5 to +7V | |
| RxD+ or RxD- to GND | -0.3V to +7V | |
| RxD+ to RxD- | ±6V | with 120Ω Line Termination = ON |
| TxD+ or TxD- to GND | -8V to +8V | |
| ExtTrig to GND | -0.3V to +7V | |
| TOV to GND | -0.3V to +7V | |
| NRST to GND | -0.3V to +7V | |
| Chassis to GND | 500V | |
| Helium sensitivity | | Not to be exposed to helium concentrations higher than those normally found in the atmosphere |

# 6 SPECIFICATIONS

**Table 6-1: Operating conditions**

| Parameter | Conditions | Min | Nom | Max | Unit | Note |
|---|---|---|---|---|---|---|
| **INPUT RANGE** | | | ±400 | | °/s | |
| **POWER SUPPLY** | | 4.5 | 5.0 | 5.5 | V | |
| **OPERATING TEMPERATURE** | | -40 | | +85 | °C | |

**Table 6-2: Functional specifications, general**

| Parameter | Conditions | Min | Nom | Max | Unit | Note |
|---|---|---|---|---|---|---|
| **POWER CONSUMPTION** | | | | | | |
| Power consumption | | | | 1.5 | W | |
| **TIMING** | | | | | | |
| Start-Up time after Power-On | | | | 0.3 | s | 1 |
| Time to transmit after Reset | | | | 0.2 | s | 2 |
| Time to valid data | | | 0.7 | | s | 3 |
| | T=+25°C | | | 1 | s | 3 |
| RS422 Bit-Rate | | | ref. Table 6-5 | | | |
| RS422 Bit-Rate Accuracy | | | | ±1 | % | |
| **RS422 PROTOCOL** | | | | | | |
| Start Bit | | | 1 | | bit | |
| Data Length | | | 8 | | bits | |
| Parity | | | None | | | 4 |
| Stop-bits | | | 1 | | bit | 4 |
| **RS422 LINE TERMINATION** | | | | | | |
| Input resistance | Line termination = ON | | 120 | | Ω | |
| Input resistance | Line termination = OFF | 48 | 125 | | kΩ | |
| **RESET (NRST PIN)** | | | | | | |
| Logic levels | "high" | 2.3 | | | V | |
| | "low" | | | 0.6 | V | |
| Minimum hold time for reset | | 1 | | | µs | |
| Pull-Up Resistor | | 80 | 100 | | kΩ | |
| **EXTERNAL TRIGGER** | | | | | | |
| Logic levels | "high" | 2.3 | | | V | |
| | "low" | | | 0.6 | V | |
| Trigger | | | Negative transition | | | |
| Minimum "high" time before trigger, $t_{ext_hi}$ | | 250 | | | ns | 5 |
| Minimum "low" time after trigger, $t_{ext_lo}$ | | 250 | | | ns | 5 |
| Delay from external trigger to start of transmission, $t_{ext_dl}$ | | | | 86 | µs | 5 |
| Time between triggers | Measurement.unit: | | | | | |
| | angular rate | 0.5 | | 127 | ms | 6,7 |
| | incremental angle | 0.5 | | 127 | ms | 6,8 |
| | average rate | 0.5 | | 65 | ms | 6,9 |
| | integrated angle | 0.5 | | 8 | ms | 6,10 |
| Pull-Up Resistor | | 40 | 50 | | kΩ | |
| Latency | | | | 1000 | µs | |
| **TIME OF VALIDITY (TOV PIN)** | | | | | | |
| Output configuration | | | Open drain | | | |
| Internal Pull-Up Resistor to Vsup | | | 10 | | kΩ | |
| Sink capability | | | | 50 | mA | |
| TOV active level | | | Active "low" | | | |
| Minimum time of TOV, $t_{tov\ min}$ | | 50 | | | µs | 11 |
| Delay from internal time-tick to TOV active, $t_{tov_dl}$ | | | 0.5 | 6 | µs | 11 |
| Delay from TOV "low" to start of transmission, $t_{tx\ dl}$ | | | | 80 | µs | 11 |
| **CHASSIS** | | | | | | |
| Isolation resistance chassis to GND (pin 15) | 500V | 100 | | | MΩ | |

Note 1: Time from Power-On to start of datagram transmissions (starting with part-number datagram)
Note 2: Time from Reset release to start of datagram transmissions (starting with part-number datagram)
Note 3: Time from Power-On or Reset to the reset of the Start-Up bit (Bit 6 in the STATUS byte ref. Table 6-13). During this period the output data should be regarded as non-valid
Note 4: Other values can be configured, ref. Table 6-5
Note 5: For definition, ref. Figure 8-3
Note 6: If time between triggers is longer than 127ms, the sample counter will over-run

Note 7: Time between triggers should be carefully evaluated as long time between triggers in combination with high bandwidths could lead to issues related to folding
Note 8: If time between triggers is longer than 8ms, an overload may occur in the incremental angle. An overload will be flagged in the status byte, ref. Table 6-13
Note 9: If time between triggers is longer than specified, the accuracy of average rate may be reduced
Note 10: If time between triggers is longer than specified, the integrated angle may have wrapped several times and hence the change in angle from last sample will not be possible to calculate
Note 11: For definition, ref. Figure 8-4 and Figure 8-5

**Table 6-3: Functional specifications, gyros**

| Parameter | Conditions | Min | Nom | Max | Unit | Note |
|---|---|---|---|---|---|---|
| Full Scale (FS) | | | ±400 | | °/s | 1 |
| Resolution | | | 24 | | bits | |
| | | | 0.22 | | °/h | |
| Scale Factor Accuracy | | | ±500 | | ppm | |
| Non-Linearity | ±200°/s | | 15 | | ppm | 2 |
| | ±400°/s | | 25 | | ppm | 2 |
| Bandwidth (-3dB) | | | 262 | | Hz | 3 |
| Sample Rate | | | | 2000 | samples/s | 4 |
| Group Delay | | | 1.6 | | ms | 5 |
| Bias Range | | -250 | 0 | +250 | °/h | |
| Bias Run-Run | | | 4 | | °/h | |
| Bias error over temperature | Static temperatures | | 9 | | °/h | 6 |
| Bias error over temperature gradients | $\Delta T \leq \pm 1$°C/min | | 10 | | °/h | 7 |
| Bias Instability | Allan Variance @25°C | | 0.3 | | °/h | |
| Angular Random Walk | Allan Variance @25°C | | 0.15 | | °/√hr | |
| Linear Acceleration Effect | | | 7 | | °/h /g | 8 |
| Vibration Rectification Coefficient | | | Ref. Figure 6-1 | | °/h /$g^2_{rms}$ | |
| Misalignment | | | | | | |
| STIM210X,Y,Z (1 axis version) | | | 5 | | mrad | 9 |
| STIM210XY,XZ,YZ (2 axis version) | | | 5 | | mrad | 9 |
| STIM210 (3 axis version) | | | 1 | | mrad | 9 |

Note 1: Output is monotonous and will saturate at ±480°/s
Note 2: Largest deviation from BSL (Best Straight Line) over the range specified
Note 3: Low-pass filter -3dB frequency can be configured, ref. Table 6-5 and section 6.1.4
Note 4: Other values can be configured, ref. Table 6-5
Note 5: Specified group delay is valid for a filter setting = 262Hz. See Table 6-5 to find group delay for other filter-settings. Total delay to start of datagram transmission = group delay + 0.5ms + $t_{tov_dl}$ + $t_{tx_dl}$
Note 6: rms-value calculated on the residuals at static temperatures over the temperature range
Note 7: rms-value calculated on the residual over two temperature-cycles, ref. Figure 6-5
Note 8: Section 7.2 gives advice on sensitive directions
Note 9: Ref. Figure 6-2 for definition of reference points used in axes alignment

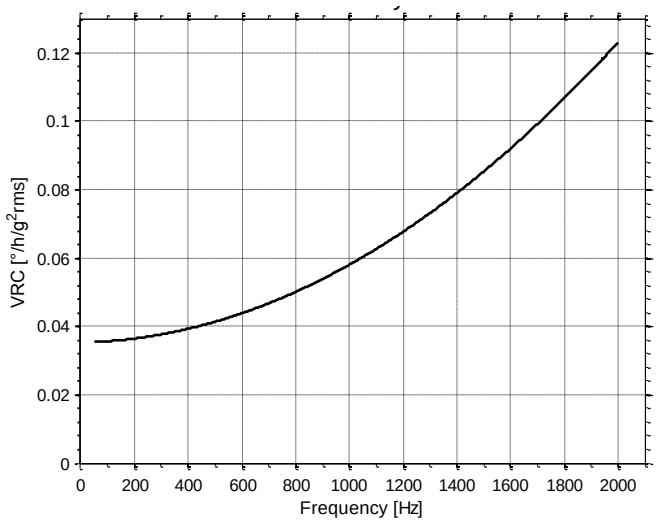


**Figure 6-1: Nominal VRC at 5g rms for gyros**

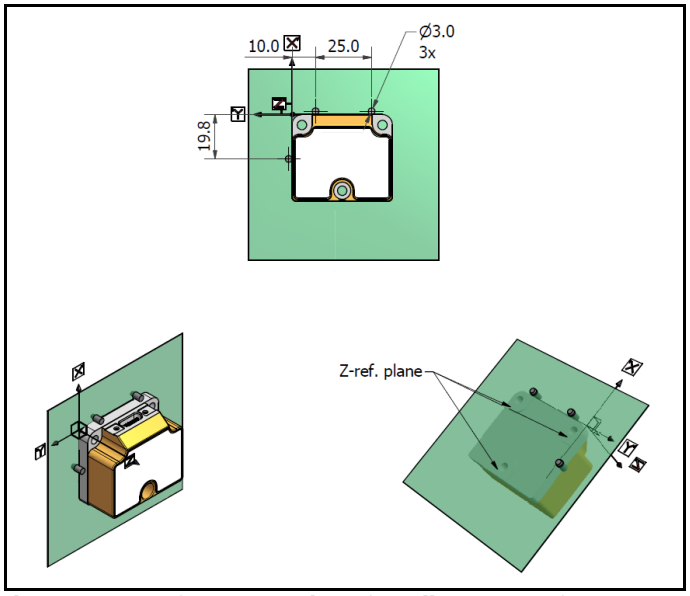


**Figure 6-2: Reference points for alignment of axes**

**Table 6-4: Functional specifications, temperature**

| Parameter | Conditions | Min | Nom | Max | Unit | Note |
|---|---|---|---|---|---|---|
| Bias Accuracy | @25°C | | ±5 | | °C | 1 |
| Scale factor accuracy | | | ±5 | | % | |

Note 1: Temperature is calibrated to reflect ambient temperature and not the internal temperature.

## 6.1 TYPICAL PERFORMANCE CHARACTERISTICS

### 6.1.1 Root Allan Variance

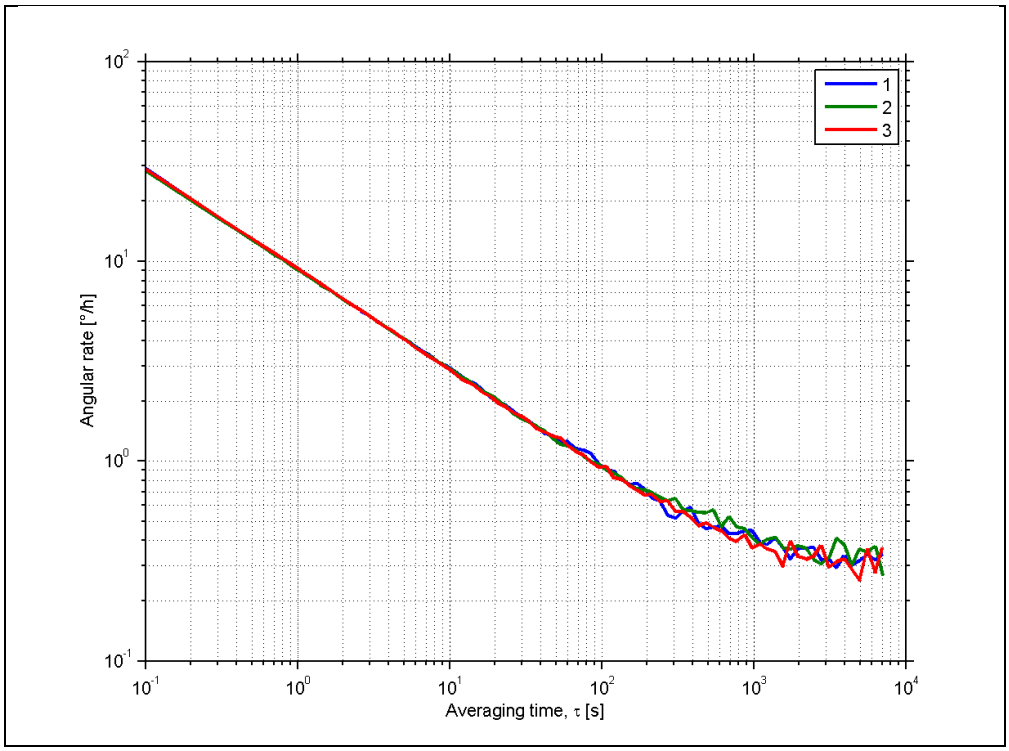


**Figure 6-3: Typical Root Allan-Variance**

### 6.1.2 Initial bias drift

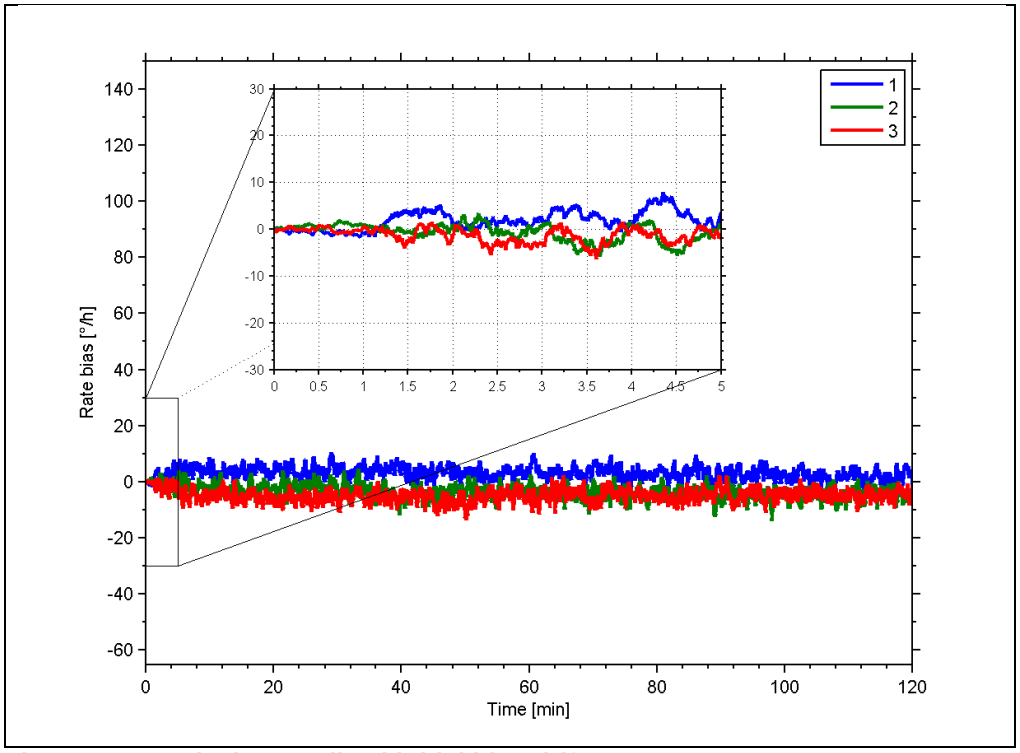


**Figure 6-4: Typical normalized initial bias drift**

### 6.1.3 Bias drift over temperature

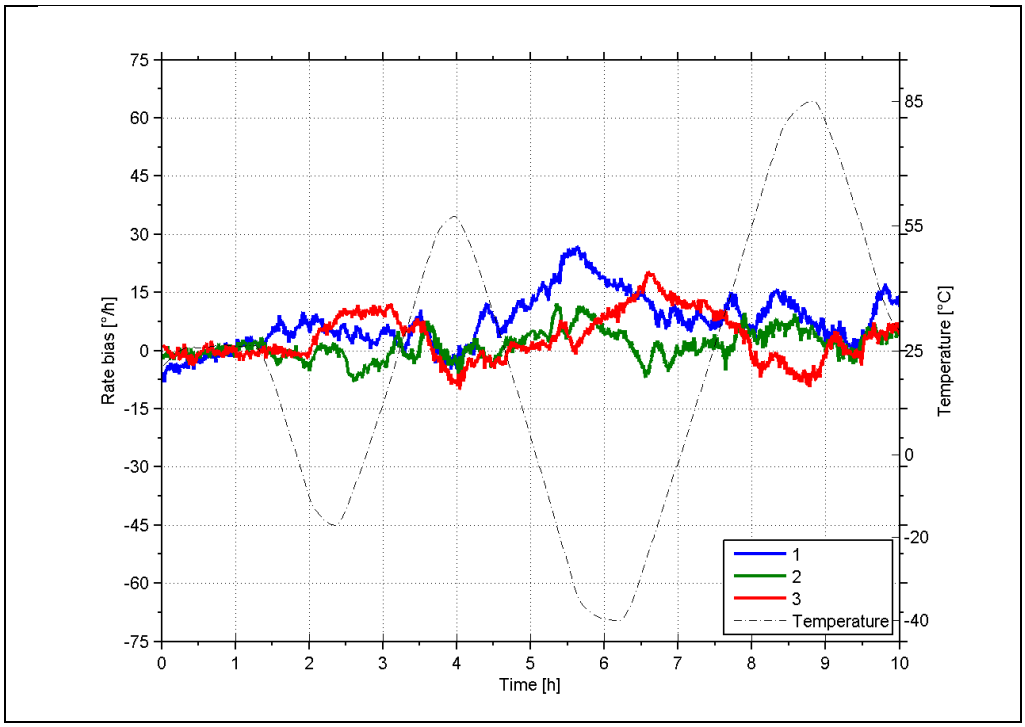


**Figure 6-5: Typical Bias drift over temperature**

### 6.1.4 Frequency characteristics

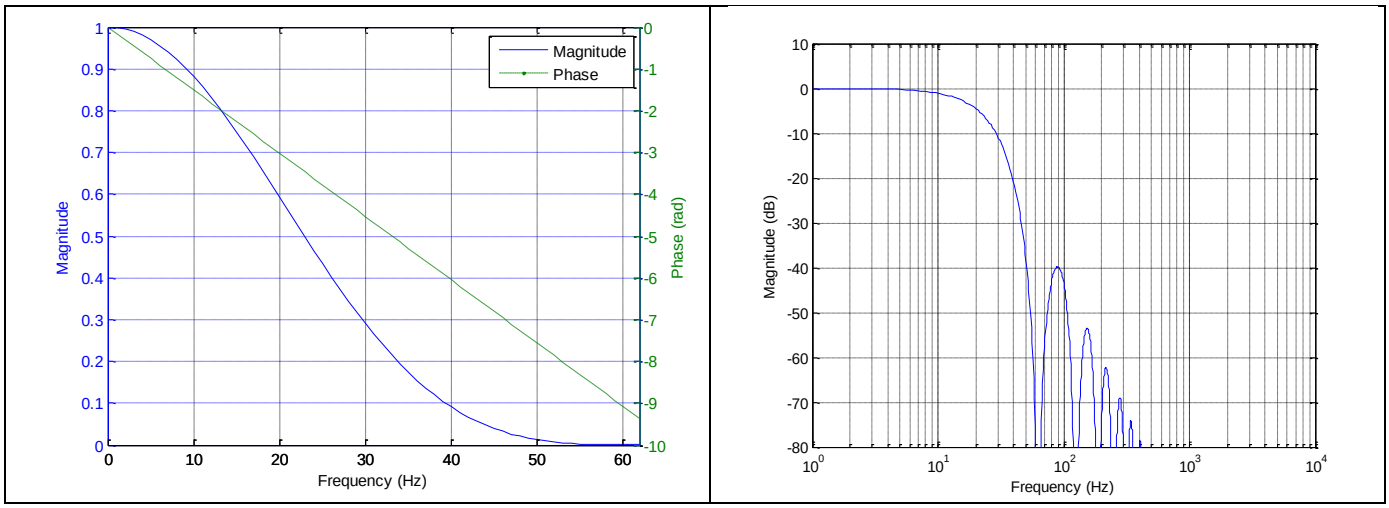


**Figure 6-6: Frequency characteristics with low-pass filter -3dB frequency set to 16Hz**

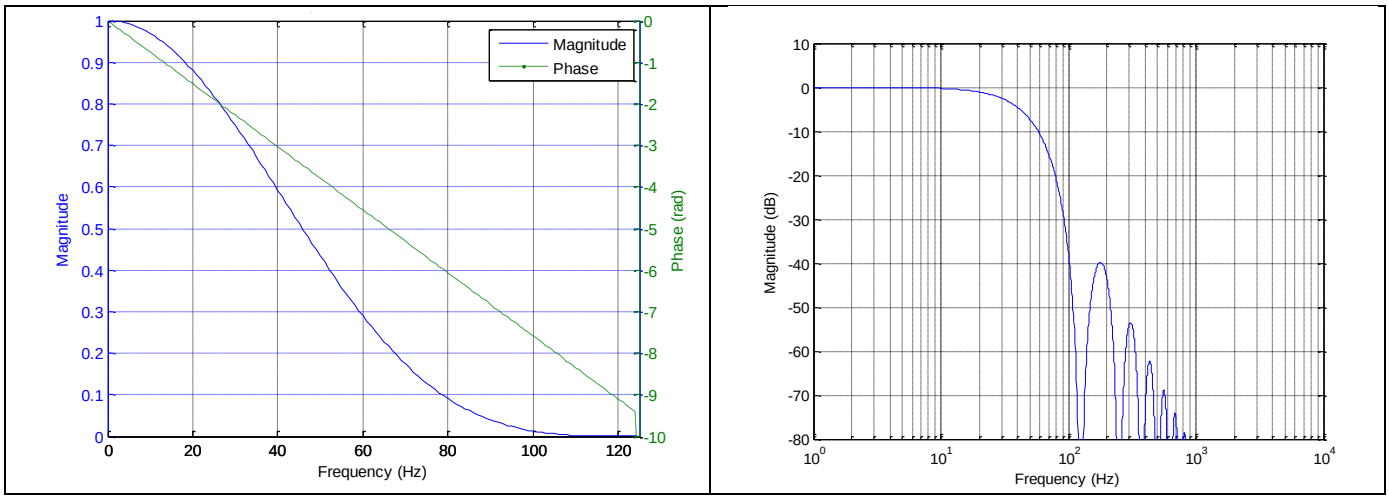


**Figure 6-7: Frequency characteristics with low-pass filter -3dB frequency set to 33Hz**

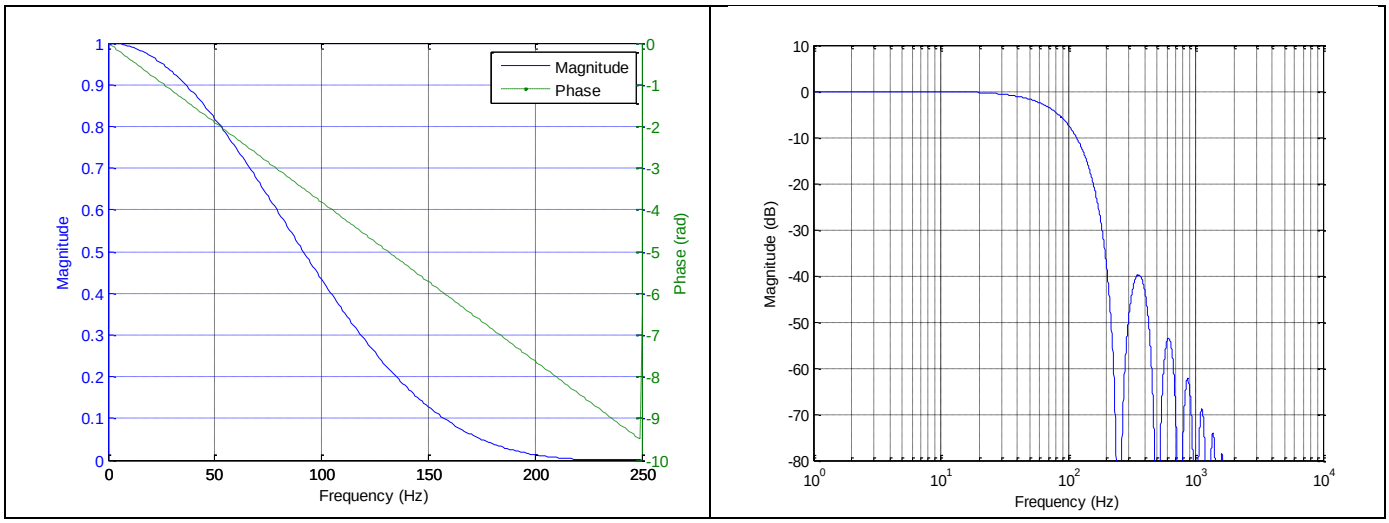


**Figure 6-8: Frequency characteristics with low-pass filter -3dB frequency set to 66Hz**

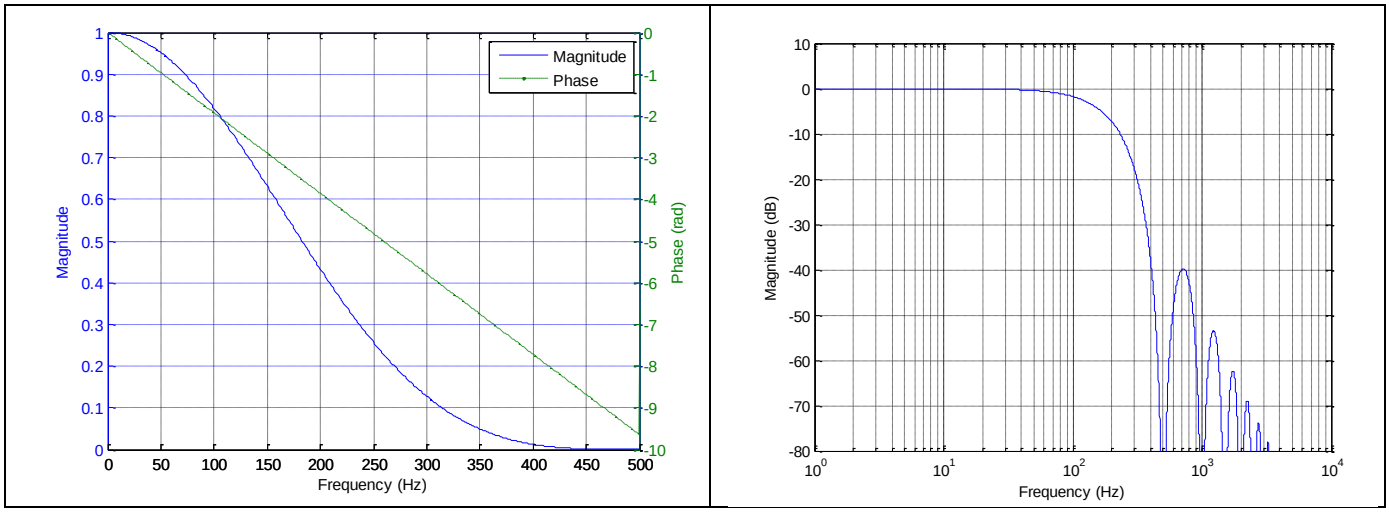


**Figure 6-9: Frequency characteristics with low-pass filter -3dB frequency set to 131Hz**

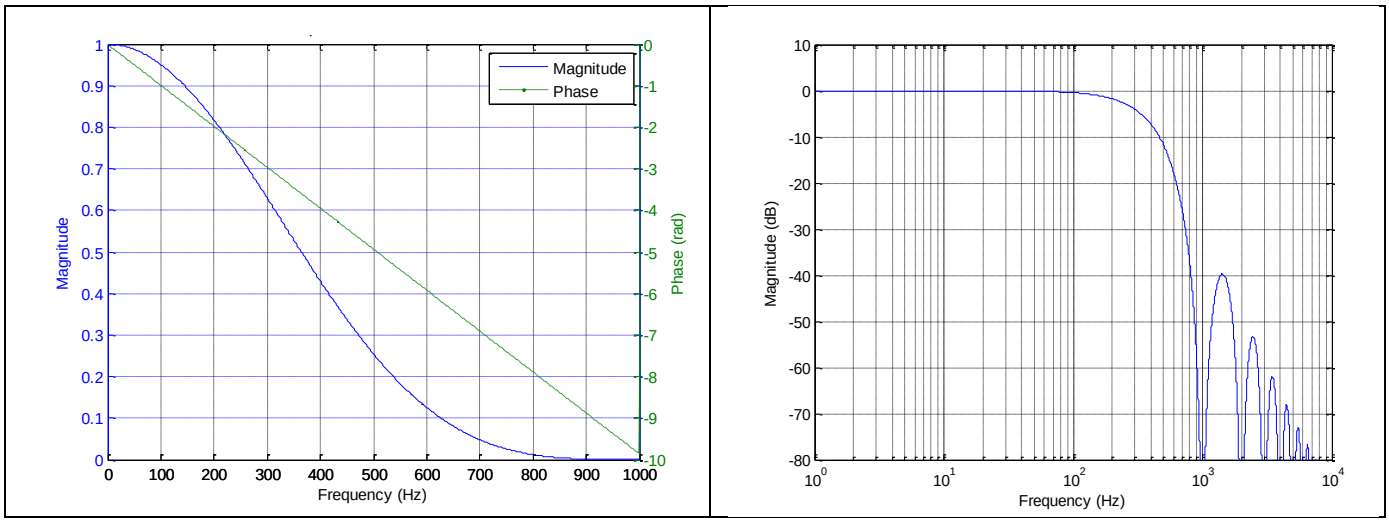


**Figure 6-10: Frequency characteristics with low-pass filter -3dB frequency set to 262Hz**

### 6.2 Configurable parameters

**Table 6-5: Configurable parameters**

| Parameter | Configurations | | Comments |
|---|---|---|---|
| **DATAGRAM FORMAT** | Standard<br>Extended<br>Rate and temperature<br>Rate and counter<br>Rate and latency<br>Rate, counter and latency<br>Rate, temperature and counter<br>Rate, temperature and latency<br>Rate, temperature, counter and latency | | Contains measurements and status byte<br>For future use |
| **DATAGRAM TERMINATION** | NONE<br><CR><LF> | | |
| **MEASUREMENT UNIT** | Angular rate [°/s]<br>Incremental angle [°/sample]<br>Average angular rate [°/s]<br>Integrated angle [°] | | |
| **SAMPLE RATE** | 125 samples/s<br>250 samples/s<br>500 samples/s<br>1000 samples/s<br>2000 samples/s<br>External trigger | | |
| **LOW-PASS FILTER -3dB FREQUENCY** | **-3dB freq.:**<br>16Hz<br>33Hz<br>66Hz<br>131Hz<br>262Hz | **Filter group delay:**<br>23.4ms<br>11.7ms<br>5.9ms<br>3.0ms<br>1.6ms | Filter settings are independent of sample rate.<br>Low-pass filters are CIC type filters with linear phase response.<br>Filter settings can be set individually for each axis.<br>Total delay to the start of datagram transmission = group delay + 0.5ms + $t_{tov_dl}$ + $t_{tx_dl}$ |
| **RS422 BIT-RATE** | 374400 bits/s<br>460800 bits/s<br>921600 bits/s<br>1843200 bits/s<br>User-defined | | Some limitations apply to the use of 374400 and 460800 bits/s, dependent on chosen sample rate and datagram format, ref Table 6-12.<br>For user-defined bit-rates, see section 10.5 |
| **RS422 PARITY** | None<br>Odd<br>Even | | |
| **RS422 STOP-BITS** | 1 stop-bit<br>2 stop-bits | | |
| **RS422 120Ω LINE TERMINATION** | OFF<br>ON | | |

Refer to chapter 12 for information on how to configure STIM210 when ordering.

## 6.3 Datagram specifications

**Table 6-6: Specification of the Part Number datagram**

| Byte# | Bit# 7 | 6 | 5 | 4 | 3 | 2 | 1 | 0 | Specification |
|---|---|---|---|---|---|---|---|---|---|
| 0 | 0<br>0 | 1<br>1 | 0<br>0 | 1<br>1 | 0<br>0 | 1<br>1 | 0<br>1 | 0<br>0 | **Part Number datagram identifier:**<br>0x54 for datagrams without CR+LF termination<br>0x56 for standard datagrams w.CR+LF |
| 1 | 0 | 0 | 0 | 0 | $P1_3$ | $P1_2$ | $P1_1$ | $P1_0$ | Low nibble: 1.digit (BCD) of part number |
| 2 | $P2_3$ | $P2_2$ | $P2_1$ | $P2_0$ | $P3_3$ | $P3_2$ | $P3_1$ | $P3_0$ | High nibble: 2.digit (BCD) of part number<br>Low nibble: 3.digit (BCD) of part number |
| 3 | $P4_3$ | $P4_2$ | $P4_1$ | $P4_0$ | $P5_3$ | $P5_2$ | $P5_1$ | $P5_0$ | High nibble: 4.digit (BCD) of part number<br>Low nibble: 5.digit (BCD) of part number |
| 4 | 0 | 0 | 1 | 0 | 1 | 1 | 0 | 1 | ASCII character “-“ (0x2D) |
| 5 | $P6_3$ | $P6_2$ | $P6_1$ | $P6_0$ | $P7_3$ | $P7_2$ | $P7_1$ | $P7_0$ | High nibble: 6.digit (BCD) of part number<br>Low nibble: 7.digit (BCD) of part number |
| 6 | $P8_3$ | $P8_2$ | $P8_1$ | $P8_0$ | $P9_3$ | $P9_2$ | $P9_1$ | $P9_0$ | High nibble: 8.digit (BCD) of part number<br>Low nibble: 9.digit (BCD) of part number |
| 7 | 0 | 0 | 1 | 0 | 1 | 1 | 0 | 1 | ASCII character “-“(0x2D) |
| 8 | $P10_3$ | $P10_2$ | $P10_1$ | $P10_0$ | $P11_3$ | $P11_2$ | $P11_1$ | $P11_0$ | High nibble: 10.digit (BCD) of part number<br>Low nibble: 11.digit (BCD) of part number |
| 9 | $P11_3$ | $P11_2$ | $P11_1$ | $P11_0$ | $P13_3$ | $P13_2$ | $P13_1$ | $P13_0$ | High nibble: 12.digit (BCD) of part number<br>Low nibble: 13.digit (BCD) of part number |
| 10 | $r_7$ | $r_6$ | $r_5$ | $r_4$ | $r_3$ | $r_2$ | $r_1$ | $r_0$ | Part number revision. Content of byte represents the ASCII character of the revision.<br>Numbering sequence: “-“, “A”, “B”, …., “Z” |
| 11 | $c_7$ | $c_6$ | $c_5$ | $c_4$ | $c_3$ | $c_2$ | $c_1$ | $c_0$ | Cyclic Redundancy Check is performed on all preceding bytes and is generated from the polynomial:<br>$x^8 + x^2 + x + 1$, seed = 0xFF |
| (12) | 0 | 0 | 0 | 0 | 1 | 1 | 0 | 1 | <CR> only when <CR><LF> datagram termination have been chosen |
| (13) | 0 | 0 | 0 | 0 | 1 | 0 | 1 | 0 | <LF> only when <CR><LF> datagram termination have been chosen |

**Table 6-7: Specification of the Serial Number datagram**

| Byte# | Bit# 7 | 6 | 5 | 4 | 3 | 2 | 1 | 0 | Specification |
|---|---|---|---|---|---|---|---|---|---|
| 0 | 0<br>0 | 1<br>1 | 0<br>0 | 1<br>1 | 1<br>1 | 0<br>0 | 1<br>0 | 0<br>0 | **Serial Number datagram identifier:**<br>0x5A for datagrams without CR+LF termination<br>0x5C for standard datagrams w.CR+LF |
| 1 | 0 | 1 | 0 | 0 | 1 | 1 | 1 | 0 | ASCII character for letter “N” |
| 2 | $S1_3$ | $S1_2$ | $S1_1$ | $S1_0$ | $S2_3$ | $S2_2$ | $S2_1$ | $S2_0$ | High nibble: 1.digit (BCD) of serial number<br>Low nibble: 2.digit (BCD) of serial number |
| 3 | $S3_3$ | $S3_2$ | $S3_1$ | $S3_0$ | $S4_3$ | $S4_2$ | $S4_1$ | $S4_0$ | High nibble: 3.digit (BCD) of serial number<br>Low nibble: 4.digit (BCD) of serial number |
| 4 | $S5_3$ | $S5_2$ | $S5_1$ | $S5_0$ | $S6_3$ | $S6_2$ | $S6_1$ | $S6_0$ | High nibble: 5.digit (BCD) of serial number<br>Low nibble: 6.digit (BCD) of serial number |
| 5 | $S7_3$ | $S7_2$ | $S7_1$ | $S7_0$ | $S8_3$ | $S8_2$ | $S8_1$ | $S8_0$ | High nibble: 7.digit (BCD) of serial number<br>Low nibble: 8.digit (BCD) of serial number |
| 6 | $S9_3$ | $S9_2$ | $S9_1$ | $S9_0$ | $S10_3$ | $S10_2$ | $S10_1$ | $S10_0$ | High nibble: 9.digit (BCD) of serial number<br>Low nibble: 10.digit (BCD) of serial number |
| 7 | $S11_3$ | $S11_2$ | $S11_1$ | $S11_0$ | $S11_3$ | $S11_2$ | $S11_1$ | $S11_0$ | High nibble: 11.digit (BCD) of serial number<br>Low nibble: 12.digit (BCD) of serial number |
| 8 | $S13_3$ | $S13_2$ | $S13_1$ | $S13_0$ | $S14_3$ | $S14_2$ | $S14_1$ | $S14_0$ | High nibble: 13.digit (BCD) of serial number<br>Low nibble: 14.digit (BCD) of serial number |
| 9 | x | x | x | x | x | x | x | x | For future use. |
| 10 | x | x | x | x | x | x | x | x | For future use. |
| 11 | $c_7$ | $c_6$ | $c_5$ | $c_4$ | $c_3$ | $c_2$ | $c_1$ | $c_0$ | Cyclic Redundancy Check is performed on all preceding bytes and is generated from the polynomial:<br>$x^8 + x^2 + x + 1$, seed = 0xFF |
| (12) | 0 | 0 | 0 | 0 | 1 | 1 | 0 | 1 | <CR> only when <CR><LF> datagram termination have been chosen |
| (13) | 0 | 0 | 0 | 0 | 1 | 0 | 1 | 0 | <LF> only when <CR><LF> datagram termination have been chosen |

**Table 6-8: Specification of the Configuration datagram**

| Byte# | Bit# 7 | 6 | 5 | 4 | 3 | 2 | 1 | 0 | Specification |
|---|---|---|---|---|---|---|---|---|---|
| 0 | | | | | | | | | **Configuration datagram identifier:** |
| | 0 | 0 | 1 | 0 | 1 | 0 | 0 | 0 | 0x28 for datagrams without CR+LF termination |
| | 0 | 0 | 1 | 0 | 1 | 0 | 1 | 1 | 0x2B for standard datagrams w.CR+LF |
| 1 | $r_7$ | $r_6$ | $r_5$ | $r_4$ | $r_3$ | $r_2$ | $r_1$ | $r_0$ | Part number revision. Content of byte represents the ASCII character of the revision. Numbering sequence: "-", "A", "B", …., "Z" |
| 2 | $f_7$ | $f_6$ | $f_5$ | $f_4$ | $f_3$ | $f_2$ | $f_1$ | $f_0$ | Firmware revision. Numbering sequence: 0, 1, …, 255 |
| 3 | $h_7$ | $h_6$ | $h_5$ | $h_4$ | $h_3$ | $h_2$ | $h_1$ | $h_0$ | Hardware revision. Numbering sequence: 0, 1, …, 255 |
| 4 | | | | | | | | | **System configuration, Byte 1:** |
| | 0 | x | x | x | x | x | x | x | Z axis is inactive |
| | 1 | x | x | x | x | x | x | x | Z axis is active |
| | x | 1 | 0 | 0 | x | x | x | x | LP filter -3dB frequency for Z axis = 262Hz |
| | x | 0 | 1 | 1 | x | x | x | x | LP filter -3dB frequency for Z axis = 131Hz |
| | x | 0 | 1 | 0 | x | x | x | x | LP filter -3dB frequency for Z axis = 66Hz |
| | x | 0 | 0 | 1 | x | x | x | x | LP filter -3dB frequency for Z axis = 33Hz |
| | x | 0 | 0 | 0 | x | x | x | x | LP filter -3dB frequency for Z axis = 16Hz |
| | x | x | x | x | 0 | x | x | x | Y-axis is inactive |
| | x | x | x | x | 1 | x | x | x | Y-axis is active |
| | x | x | x | x | x | 1 | 0 | 0 | LP filter -3dB frequency for Y axis = 262Hz |
| | x | x | x | x | x | 0 | 1 | 1 | LP filter -3dB frequency for Y axis = 131Hz |
| | x | x | x | x | x | 0 | 1 | 0 | LP filter -3dB frequency for Y axis = 66Hz |
| | x | x | x | x | x | 0 | 0 | 1 | LP filter -3dB frequency for Y axis = 33Hz |
| | x | x | x | x | x | 0 | 0 | 0 | LP filter -3dB frequency for Y axis = 16Hz |
| 5 | | | | | | | | | **System configuration, Byte 2:** |
| | 0 | x | x | x | x | x | x | x | X-axis is inactive |
| | 1 | x | x | x | x | x | x | x | X-axis is active |
| | x | 1 | 0 | 0 | x | x | x | x | LP filter -3dB frequency for X axis = 262Hz |
| | x | 0 | 1 | 1 | x | x | x | x | LP filter -3dB frequency for X axis = 131Hz |
| | x | 0 | 1 | 0 | x | x | x | x | LP filter -3dB frequency for X axis = 66Hz |
| | x | 0 | 0 | 1 | x | x | x | x | LP filter -3dB frequency for X axis = 33Hz |
| | x | 0 | 0 | 0 | x | x | x | x | LP filter -3dB frequency for X axis = 16Hz |
| | x | x | x | x | 1 | 0 | 1 | x | Sample rate = External trigger |
| | x | x | x | x | 1 | 0 | 0 | x | Sample rate = 2000 samples/s |
| | x | x | x | x | 0 | 1 | 1 | x | Sample rate = 1000 samples/s |
| | x | x | x | x | 0 | 1 | 0 | x | Sample rate = 500 samples/s |
| | x | x | x | x | 0 | 0 | 1 | x | Sample rate = 250 samples/s |
| | x | x | x | x | 0 | 0 | 0 | x | Sample rate = 125 samples/s |
| | x | x | x | x | x | x | x | 0 | Output unit = ANGULAR RATE |
| | x | x | x | x | x | x | x | 1 | Output unit = other than ANGULAR RATE (ref. byte#8) |
| 6 | | | | | | | | | **System configuration, Byte 3:** |
| | 0 | x | x | x | x | x | x | x | Datagram format = STANDARD |
| | 1 | x | x | x | x | x | x | x | Datagram format = other than STANDARD (ref. byte#8) |
| | x | 0 | 1 | 1 | x | x | x | x | Bit-rate = 1843200 bits/s |
| | x | 0 | 1 | 0 | x | x | x | x | Bit-rate = 921600 bits/s |
| | x | 0 | 0 | 1 | x | x | x | x | Bit-rate = 460800 bits/s |
| | x | 0 | 0 | 0 | x | x | x | x | Bit-rate = 374400 bits/s |
| | x | 1 | 1 | 1 | x | x | x | x | Bit-rate = User-defined, ref.section 10.5 |
| | x | x | x | x | 0 | x | x | x | Stop-bit = 1 |
| | x | x | x | x | 1 | x | x | x | Stop-bits = 2 |
| | x | x | x | x | x | 0 | 0 | x | Parity = none |
| | x | x | x | x | x | 0 | 1 | x | Parity = even |
| | x | x | x | x | x | 1 | 0 | x | Parity = odd |
| | x | x | x | x | x | x | x | 0 | Line termination = OFF |
| | x | x | x | x | x | x | x | 1 | Line termination = ON |
| 7 | $s_7$ | $s_6$ | $s_5$ | $s_4$ | $s_3$ | $s_2$ | $s_1$ | $s_0$ | STATUS byte. Ref.Table 6-13 for specification of the STATUS byte. |
| 8 | | | | | | | | | **System configuration, Byte 4:** |
| | 0 | 0 | 0 | 0 | x | x | x | x | Output unit = ANGULAR RATE |
| | 0 | 0 | 0 | 1 | x | x | x | x | Output unit = INCREMENTAL ANGLE |
| | 0 | 0 | 1 | 0 | x | x | x | x | Output unit = AVERAGE ANGULAR RATE |
| | 0 | 0 | 1 | 1 | x | x | x | x | Output unit = INTEGRATED ANGLE |
| | x | x | x | x | 0 | 0 | 0 | 0 | Datagram format = Standard |
| | x | x | x | x | 0 | 0 | 0 | 1 | Datagram format = Extended |
| | x | x | x | x | 0 | 0 | 1 | 1 | Datagram format = Rate and temperature, |
| | x | x | x | x | 0 | 1 | 0 | 0 | Datagram format = Rate and counter, |
| | x | x | x | x | 0 | 1 | 0 | 1 | Datagram format = Rate and latency |
| | x | x | x | x | 0 | 1 | 1 | 0 | Datagram format = Rate, counter and latency |
| | x | x | x | x | 0 | 1 | 1 | 1 | Datagram format = Rate, temperature and counter |
| | x | x | x | x | 1 | 0 | 0 | 0 | Datagram format = Rate, temperature and latency |
| | x | x | x | x | 1 | 0 | 0 | 1 | Datagram format = Rate, temperature, counter and latency |

| Byte# | Bit# 7 | 6 | 5 | 4 | 3 | 2 | 1 | 0 | Specification |
|---|---|---|---|---|---|---|---|---|---|
| 9 | 0<br>x | 0<br>x | 0<br>x | 0<br>x | x<br>0 | x<br>0 | x<br>0 | x<br>0 | High nibble: Gyro range, x-axis<br>- 400°/s<br>Low nibble: Gyro range, y-axis<br>- 400°/s |
| 10 | 0 | 0 | 0 | 0 | x | x | x | x | High nibble: Gyro range, z-axis<br>- 400°/s |
| 11 | $c_7$ | $c_6$ | $c_5$ | $c_4$ | $c_3$ | $c_2$ | $c_1$ | $c_0$ | Cyclic Redundancy Check is performed on all preceding bytes and is generated from the polynomial: $x^8 + x^2 + x + 1$, seed = 0xFF |
| (12) | 0 | 0 | 0 | 0 | 1 | 1 | 0 | 1 | <CR> only when <CR><LF> datagram termination have been chosen |
| (13) | 0 | 0 | 0 | 0 | 1 | 0 | 1 | 0 | <LF> only when <CR><LF> datagram termination have been chosen |

**Table 6-9: Specification of the Extended Error Information datagram**

| Byte# | Bit# 7 | 6 | 5 | 4 | 3 | 2 | 1 | 0 | Specification |
|---|---|---|---|---|---|---|---|---|---|
| 0 | 0<br>0 | 0<br>0 | 1<br>1 | 0<br>0 | 1<br>1 | 1<br>1 | 1<br>1 | 0<br>1 | **Extended Error Information datagram identifier:**<br>0x2E for datagrams without CR+LF termination<br>0x2F for datagrams with CR+LF termination |
| 1 | $E_{79}$ | $E_{78}$ | $E_{77}$ | $E_{76}$ | $E_{75}$ | $E_{74}$ | $E_{73}$ | $E_{72}$ | Ref. Table 6-10 |
| 2 | $E_{71}$ | $E_{70}$ | $E_{69}$ | $E_{68}$ | $E_{67}$ | $E_{66}$ | $E_{65}$ | $E_{64}$ | Ref. Table 6-10 |
| 3 | $E_{63}$ | $E_{62}$ | $E_{61}$ | $E_{60}$ | $E_{59}$ | $E_{58}$ | $E_{57}$ | $E_{56}$ | Ref. Table 6-10 |
| 4 | $E_{55}$ | $E_{54}$ | $E_{53}$ | $E_{52}$ | $E_{51}$ | $E_{50}$ | $E_{49}$ | $E_{48}$ | Ref. Table 6-10 |
| 5 | $E_{47}$ | $E_{46}$ | $E_{45}$ | $E_{44}$ | $E_{43}$ | $E_{42}$ | $E_{41}$ | $E_{40}$ | Ref. Table 6-10 |
| 6 | $E_{39}$ | $E_{38}$ | $E_{37}$ | $E_{36}$ | $E_{35}$ | $E_{34}$ | $E_{33}$ | $E_{32}$ | Ref. Table 6-10 |
| 7 | $E_{31}$ | $E_{30}$ | $E_{29}$ | $E_{28}$ | $E_{27}$ | $E_{26}$ | $E_{25}$ | $E_{24}$ | Ref. Table 6-10 |
| 8 | $E_{23}$ | $E_{22}$ | $E_{21}$ | $E_{20}$ | $E_{19}$ | $E_{18}$ | $E_{17}$ | $E_{16}$ | Ref. Table 6-10 |
| 9 | $E_{15}$ | $E_{14}$ | $E_{13}$ | $E_{12}$ | $E_{11}$ | $E_{10}$ | $E_9$ | $E_8$ | Ref. Table 6-10 |
| 10 | $E_7$ | $E_6$ | $E_5$ | $E_4$ | $E_3$ | $E_2$ | $E_1$ | $E_0$ | Ref. Table 6-10 |
| 11 | $C_7$ | $C_6$ | $C_5$ | $C_4$ | $C_3$ | $C_2$ | $C_1$ | $C_0$ | Cyclic Redundancy Check is performed on all preceding bytes and is generated from the polynomial:<br>$x^8 + x^2 + x + 1$, seed = 0xFF |
| (12) | 0 | 0 | 0 | 0 | 1 | 1 | 0 | 1 | <CR> If datagram termination has been selected |
| (13) | 0 | 0 | 0 | 0 | 1 | 0 | 1 | 0 | <LF> If datagram termination has been selected |

**Table 6-10: Specification of the Extended Error Information**

| Bit# | Specification | Bit# | Specification | Bit# | Specification | Bit# | Specification |
|---|---|---|---|---|---|---|---|
| $E_{79}$ | For future use (=0) | $E_{78}$ | For future use (=0) | $E_{77}$ | For future use (=0) | $E_{76}$ | For future use (=0) |
| $E_{75}$ | For future use (=0) | $E_{74}$ | For future use (=0) | $E_{73}$ | For future use (=0) | $E_{72}$ | For future use (=0) |
| $E_{71}$ | For future use (=0) | $E_{70}$ | For future use (=0) | $E_{69}$ | For future use (=0) | $E_{68}$ | GYRO Z: Config,error |
| $E_{67}$ | GYRO Y: Config,error | $E_{66}$ | GYRO X: Config.error | $E_{65}$ | µC temperature failure | $E_{64}$ | GYRO Z: ASIC temp.dev. |
| $E_{63}$ | GYRO Y: ASIC temp.dev | $E_{62}$ | GYRO X: ASIC temp.dev | $E_{61}$ | GYRO Z: Temp.deviation | $E_{60}$ | GYRO Y: Temp.deviation |
| $E_{59}$ | GYRO X: Temp.deviation | $E_{58}$ | Self-test not running | $E_{57}$ | UART unable to transmit | $E_{56}$ | GYRO Z: data missing |
| $E_{55}$ | GYRO Y: Data missing | $E_{54}$ | GYRO X: Data missing | $E_{53}$ | Transmit stack warning | $E_{52}$ | Flash stack warning |
| $E_{51}$ | Sample stack warning | $E_{50}$ | Command stack warning | $E_{49}$ | Monitor stack warning | $E_{48}$ | Internal DAC error |
| $E_{47}$ | Supply overvoltage | $E_{46}$ | Flash check error | $E_{45}$ | RAM check error | $E_{44}$ | GYRO Z: Data lost |
| $E_{43}$ | GYRO Z: Exc.ampl.error | $E_{42}$ | GYRO Z: Int.comm.error | $E_{41}$ | For future use (=0) | $E_{40}$ | For future use (=0) |
| $E_{39}$ | GYRO Z: ASIC overflow, I | $E_{38}$ | GYRO Z: ASIC overflow, Q | $E_{37}$ | GYRO Y: Data lost | $E_{36}$ | GYRO Y: Exc.ampl.error |
| $E_{35}$ | GYRO Y: Int.comm.error | $E_{34}$ | For future use (=0) | $E_{33}$ | For future use (=0) | $E_{32}$ | GYRO Y: ASIC overflow, I |
| $E_{31}$ | GYRO Y: ASIC overflow, Q | $E_{30}$ | GYRO X: Data lost | $E_{29}$ | GYRO X: Exc.ampl.error | $E_{28}$ | GYRO X: Int.comm.error |
| $E_{27}$ | For future use (=0) | $E_{26}$ | For future use (=0) | $E_{25}$ | GYRO X: ASIC overflow, I | $E_{24}$ | GYRO X: ASIC overflow, Q |
| $E_{23}$ | Regulated voltage#3 error | $E_{22}$ | Regulated voltage#2 error | $E_{21}$ | Regulated voltage#1 error | $E_{20}$ | Supply voltage error |
| $E_{19}$ | Reference voltage#3 error | $E_{18}$ | Reference voltage#2 error | $E_{17}$ | Reference voltage#1 error | $E_{16}$ | Start-up phase active |
| $E_{15}$ | GYRO Z: Int.comm.error | $E_{14}$ | GYRO Y: Int.comm.error | $E_{13}$ | GYRO X: Int.comm.error | $E_{12}$ | GYRO Z: Clipped |
| $E_{11}$ | GYRO Y: Clipped | $E_{10}$ | GYRO X: Clipped | $E_9$ | TEMP GYRO Z: Error | $E_8$ | TEMP GYRO Y: Error |
| $E_7$ | TEMP GYRO X: Error | $E_6$ | GYRO Z: ASIC temp.error | $E_5$ | GYRO Y: ASIC temp.error | $E_4$ | GYRO X: ASIC temp.error |
| $E_3$ | µC temperature error | $E_2$ | GYRO Z: Exc.freq.error | $E_1$ | GYRO Y: Exc.freq.error | $E_0$ | GYRO X: Exc.freq.error |

**Table 6-11: Specification of the Normal Mode datagram**

| Byte# | | | | | | | | | Bit# | | | | | | | | Specification |
|---|---|---|---|---|---|---|---|---|---|---|---|---|---|---|---|---|---|
| Standard datagram | Extended datagram | Rate and temperature | Rate and counter | Rate and latency | Rate, counter and latency | Rate, temperature and counter | Rate, temperature and latency | Rate, temperature, counter and latency | 7 | 6 | 5 | 4 | 3 | 2 | 1 | 0 | |
| 0 | 0 | 0 | 0 | 0 | 0 | 0 | 0 | 0 | | | | | | | | | **Normal Mode datagram identifier:** |
| | | | | | | | | | 1 | 0 | 0 | 1 | 0 | 0 | 0 | 0 | 0x90 standard datagram |
| | | | | | | | | | 1 | 0 | 0 | 1 | 0 | 0 | 1 | 0 | 0x92 extended datagram |
| | | | | | | | | | 1 | 0 | 1 | 0 | 0 | 0 | 0 | 0 | 0xA0 datagram with rate and temperature |
| | | | | | | | | | 1 | 0 | 1 | 0 | 0 | 0 | 1 | 0 | 0xA2 datagram with rate and counter |
| | | | | | | | | | 1 | 0 | 1 | 0 | 0 | 1 | 0 | 0 | 0xA4 datagram with rate and latency |
| | | | | | | | | | 1 | 0 | 1 | 0 | 0 | 1 | 0 | 1 | 0xA5 datagram with rate, counter and latency |
| | | | | | | | | | 1 | 0 | 0 | 1 | 1 | 0 | 0 | 1 | 0x99 datagram with rate, temperature and counter |
| | | | | | | | | | 1 | 0 | 1 | 0 | 0 | 1 | 1 | 0 | 0xA6 datagram with rate, temperature and latency |
| | | | | | | | | | 1 | 0 | 1 | 0 | 1 | 0 | 0 | 0 | 0xA8 datagram with rate, temperature, counter and latency |
| 1 | 1 | 1 | 1 | 1 | 1 | 1 | 1 | 1 | $x_{23}$ | $x_{22}$ | $x_{21}$ | $x_{20}$ | $x_{19}$ | $x_{18}$ | $x_{17}$ | $x_{16}$ | X axis gyro output. Ref. chapter 8.4.2.2 for conversion to units |
| 2 | 2 | 2 | 2 | 2 | 2 | 2 | 2 | 2 | $x_{15}$ | $x_{14}$ | $x_{13}$ | $x_{12}$ | $x_{11}$ | $x_{10}$ | $x_9$ | $x_8$ | |
| 3 | 3 | 3 | 3 | 3 | 3 | 3 | 3 | 3 | $x_7$ | $x_6$ | $x_5$ | $x_4$ | $x_3$ | $x_2$ | $x_1$ | $x_0$ | |
| 4 | 4 | 4 | 4 | 4 | 4 | 4 | 4 | 4 | $y_{23}$ | $y_{22}$ | $y_{21}$ | $y_{20}$ | $y_{19}$ | $y_{18}$ | $y_{17}$ | $y_{16}$ | Y axis gyro output. Ref. chapter 8.4.2.2 for conversion to units |
| 5 | 5 | 5 | 5 | 5 | 5 | 5 | 5 | 5 | $y_{15}$ | $y_{14}$ | $y_{13}$ | $y_{12}$ | $y_{11}$ | $y_{10}$ | $y_9$ | $y_8$ | |
| 6 | 6 | 6 | 6 | 6 | 6 | 6 | 6 | 6 | $y_7$ | $y_6$ | $y_5$ | $y_4$ | $y_3$ | $y_2$ | $y_1$ | $y_0$ | |
| 7 | 7 | 7 | 7 | 7 | 7 | 7 | 7 | 7 | $z_{23}$ | $z_{22}$ | $z_{21}$ | $z_{20}$ | $z_{19}$ | $z_{18}$ | $z_{17}$ | $z_{16}$ | Z axis gyro output. Ref. chapter 8.4.2.2 for conversion to units |
| 8 | 8 | 8 | 8 | 8 | 8 | 8 | 8 | 8 | $z_{15}$ | $z_{14}$ | $z_{13}$ | $z_{12}$ | $z_{11}$ | $z_{10}$ | $z_9$ | $z_8$ | |
| 9 | 9 | 9 | 9 | 9 | 9 | 9 | 9 | 9 | $z_7$ | $z_6$ | $z_5$ | $z_4$ | $z_3$ | $z_2$ | $z_1$ | $z_0$ | |
| 10 | 10 | 10 | 10 | 10 | 10 | 10 | 10 | 10 | $s_7$ | $s_6$ | $s_5$ | $s_4$ | $s_3$ | $s_2$ | $s_1$ | $s_0$ | STATUS byte. Ref.Table 6-13 for specification of this byte. |
| N/A | 11 | N/A | N/A | N/A | N/A | N/A | N/A | N/A | x | x | x | x | x | x | x | x | For future use. |
| N/A | 12 | N/A | N/A | N/A | N/A | N/A | N/A | N/A | x | x | x | x | x | x | x | x | For future use. |
| N/A | 13 | N/A | N/A | N/A | N/A | N/A | N/A | N/A | x | x | x | x | x | x | x | x | For future use. |
| N/A | N/A | 11 | N/A | N/A | N/A | 11 | 11 | 11 | $Tx_{15}$ | $Tx_{14}$ | $Tx_{13}$ | $Tx_{12}$ | $Tx_{11}$ | $Tx_{10}$ | $Tx_9$ | $Tx_8$ | X axis temperature data. Ref. chapter 8.4.2.2.5 for conversion to units |
| N/A | N/A | 12 | N/A | N/A | N/A | 12 | 12 | 12 | $Tx_7$ | $Tx_6$ | $Tx_5$ | $Tx_4$ | $Tx_3$ | $Tx_2$ | $Tx_1$ | $Tx_0$ | |
| N/A | N/A | 13 | N/A | N/A | N/A | 13 | 13 | 13 | $Ty_{15}$ | $Ty_{14}$ | $Ty_{13}$ | $Ty_{12}$ | $Ty_{11}$ | $Ty_{10}$ | $Ty_9$ | $Ty_8$ | Y axis temperature data. Ref. chapter 8.4.2.2.5 for conversion to units |
| N/A | N/A | 14 | N/A | N/A | N/A | 14 | 14 | 14 | $Ty_7$ | $Ty_6$ | $Ty_5$ | $Ty_4$ | $Ty_3$ | $Ty_2$ | $Ty_1$ | $Ty_0$ | |
| N/A | N/A | 15 | N/A | N/A | N/A | 15 | 15 | 15 | $Tz_{15}$ | $Tz_{14}$ | $Tz_{13}$ | $Tz_{12}$ | $Tz_{11}$ | $Tz_{10}$ | $Tz_9$ | $Tz_8$ | Z axis temperature data. Ref. chapter 8.4.2.2.5 for conversion to units |
| N/A | N/A | 16 | N/A | N/A | N/A | 16 | 16 | 16 | $Tz_7$ | $Tz_6$ | $Tz_5$ | $Tz_4$ | $Tz_3$ | $Tz_2$ | $Tz_1$ | $Tz_0$ | |
| N/A | N/A | N/A | 11 | N/A | 11 | 17 | N/A | 17 | $n_7$ | $n_6$ | $n_5$ | $n_4$ | $n_3$ | $n_2$ | $n_1$ | $n_0$ | Counter. Ref. chapter 8.4.2.2.6 |
| N/A | N/A | N/A | N/A | 11 | 12 | N/A | 17 | 18 | $l_{15}$ | $l_{14}$ | $l_{13}$ | $l_{12}$ | $l_{11}$ | $l_{10}$ | $l_9$ | $l_8$ | Latency. Ref. chapter 8.4.2.2.7 for conversion to units. |
| N/A | N/A | N/A | N/A | 12 | 13 | N/A | 18 | 19 | $l_7$ | $l_6$ | $l_5$ | $l_4$ | $l_3$ | $l_2$ | $l_1$ | $l_0$ | |
| 11 | 14 | 17 | 12 | 13 | 14 | 18 | 19 | 20 | $c_7$ | $c_6$ | $c_5$ | $c_4$ | $c_3$ | $c_2$ | $c_1$ | $c_0$ | Cyclic Redundancy Check is performed on all preceding bytes and is generated from the polynomial: $x^8 + x^2 + x + 1$, seed = 0xFF |
| (12) | (15) | (18) | (13) | (14) | (15) | (19) | (20) | (21) | 0 | 0 | 0 | 0 | 1 | 1 | 0 | 1 | <CR> only when <CR><LF> datagram termination have been chosen |
| (13) | (16) | (19) | (14) | (15) | (16) | (20) | (21) | (22) | 0 | 0 | 0 | 0 | 1 | 0 | 1 | 0 | <LF> only when <CR><LF> datagram termination have been chosen |

**Table 6-12: Maximum sample rate**

| | 374400 bits/s | 460800 bits/s | 921600 bits/s | 1843200 bits/s |
|---|---|---|---|---|
| **Standard datagram** | 2000 | 2000 | 2000 | 2000 |
| **Extended datagram** | 1000 | 2000 | 2000 | 2000 |
| **Rate and temperature** | 1000 | 1000 | 2000 | 2000 |
| **Rate and counter** | 2000 | 2000 | 2000 | 2000 |
| **Rate and latency** | 1000 | 2000 | 2000 | 2000 |
| **Rate, counter and latency** | 1000 | 2000 | 2000 | 2000 |
| **Rate, temperature and counter** | 1000 | 1000 | 2000 | 2000 |
| **Rate, temperature and latency** | 1000 | 1000 | 2000 | 2000 |
| **Rate, temperature, counter and latency** | 1000 | 1000 | 2000 | 2000 |

## 6.4 Status byte

**Table 6-13: Interpretation of bits in STATUS byte**

| Bit | STATUS bit information | Comment |
|---|---|---|
| 7 | 0=OK, 1=System integrity error | |
| 6 | 0=OK, 1=Start-Up | |
| 5 | 0=OK, 1=Outside operating conditions | |
| 4 | 0=OK, 1=Overload | Bits 0-2 will flag the overload channel(s) |
| 3 | 0=OK, 1=Error in gyro channel | Bits 0-2 will flag the error channel(s) |
| 2 | 0=OK, 1=Z channel | |
| 1 | 0=OK, 1=Y channel | |
| 0 | 0=OK, 1=X channel | |

Refer to chapter 8.5 for more information related to the self-diagnostics of STIM300.

## 7 MECHANICAL

**Table 7-1: Mechanical specifications**

| Parameter | Conditions | Min | Nom | Max | Unit | Note |
|---|---|---|---|---|---|---|
| **HOUSING MATERIAL** | | | Aluminium,<br>Alloy 6082-T6, DIN EN 754-2 | | | |
| **SURFACE TREATMENT**<br>Passivation | | | RoHS-compliant | | | |
| **WEIGHT** | | | 52 | | grams | |
| **VOLUME** | | | 32.6<br>1.99 | | ccm<br>cu in | |
| **DUST AND HUMIDITY CLASSIFICATION** | | | IP67 | | | |
| **CONNECTOR**<br>Type<br>Number of pins<br>Contact type<br>Contact manufacturer | | | Micro-D<br>15<br>female<br>Axon' Cable SAS | | | |
| **PLUG**<br>Proposed plug to fit connector<br>Proposed cover to fit plug | <br><br>For best EMI performance | | <br>Axon MDA 2 15 P<br>Axon micro-D EMI backshell | | | |
| **FIXATION BOLTS**<br><br>Recommended torque | <br><br>Steel base<br>Aluminium base | | M4<br>ISO 4762 / DIN 912<br>3.5<br>3.0 | | <br><br>Nm<br>Nm | |

### 7.1 Mechanical dimensions

All dimensions are in mm.

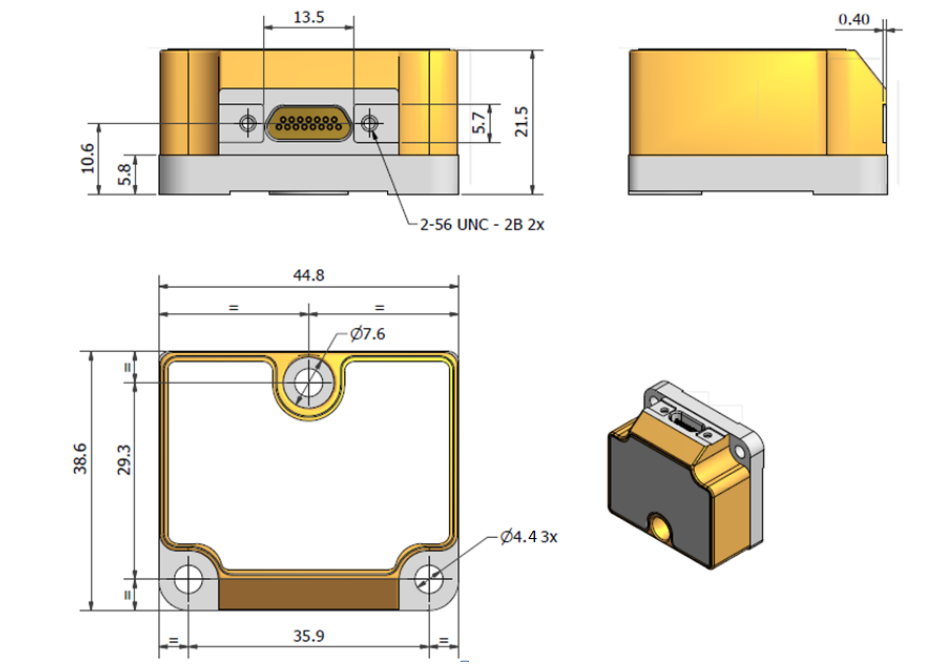


**Figure 7-1: Mechanical dimensions**

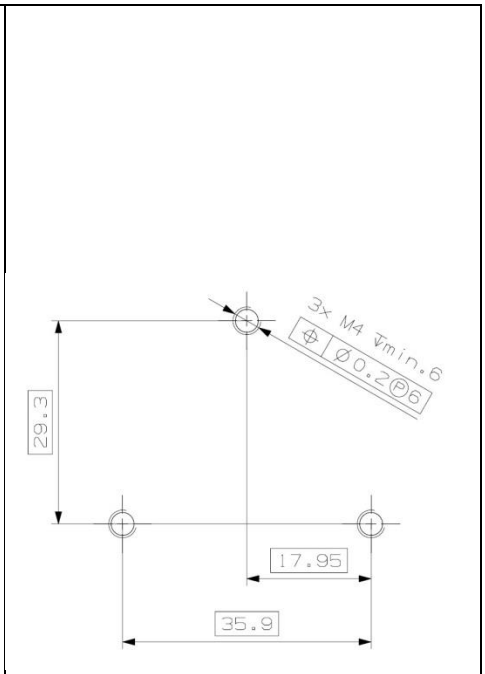


**Figure 7-2: Drilling pattern**

### 7.2 Advice on mounting orientation

The gyros are sensitive to acceleration-forces in certain directions:

- X- and Y-gyros have their highest sensitivity to acceleration-forces in Z-direction
- Z-gyro has its highest sensitivity to acceleration-forces in Y-direction
- X-gyro has its lowest sensitivity to acceleration-forces in X-direction
- Y-gyro has its lowest sensitivity to acceleration-forces in Y-direction
- Z-gyro has its lowest sensitivity to acceleration-forces in Z-direction

### 7.3 Pin configuration

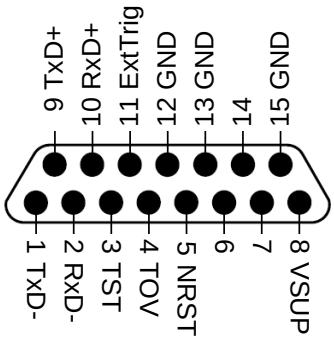


**Figure 7-3: Pin configuration as seen from front of STIM210**

**Table 7-2: Pin descriptions**

| Pin# | Label | Type | Description |
|---|---|---|---|
| 1 | TxD- | OUTPUT | RS422 negative output |
| 2 | RxD- | INPUT | RS422 negative input |
| 3 | TST | OUTPUT | Test pin: Do not connect |
| 4 | TOV | OUTPUT | Time of Validity (if not in use, leave floating) |
| 5 | NRST | INPUT | Reset (if not in use, connect to VSUP or leave floating) |
| 6 | | | Not connected |
| 7 | | | Not connected |
| 8 | VSUP | SUPPLY | Power supply (+5V) |
| 9 | TxD+ | OUTPUT | RS422 positive output |
| 10 | RxD+ | INPUT | RS422 positive input |
| 11 | ExtTrig | INPUT | External trigger (if not in use, connect to VSUP or leave floating) |
| 12 | GND | INPUT | Test pin: Connect to ground (0V) |
| 13 | GND | INPUT | Test pin: Connect to ground (0V) |
| 14 | | | Not connected |
| 15 | GND | SUPPLY | Power ground (0V) |

### 7.4 Definition of axes

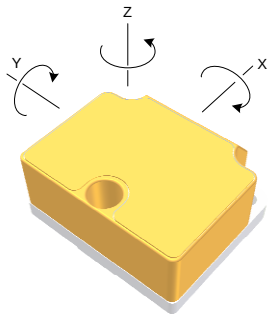


**Figure 7-4: Definition of axes**

## 8 BASIC OPERATION

STIM210 is very simple to use. Unless having been configured to external trigger, the unit will start performing measurements and transmit the results over the RS422 interface without any need for additional signalling or set-up after power-on. Figure 8-1 shows the simplest connection set-up for STIM210.

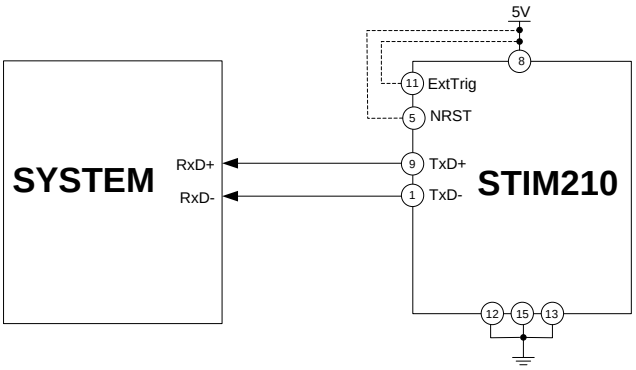


**Figure 8-1: Transmit-Only Electrical Connection Diagram**

In order to take full advantage of all features of STIM210, the unit needs to be connected as shown in Figure 8-2. In this set-up the system can reset the unit without having to toggle power, the external trigger function can be utilized, configuration parameters can be changed and extended information like diagnostic information can be read from the device.

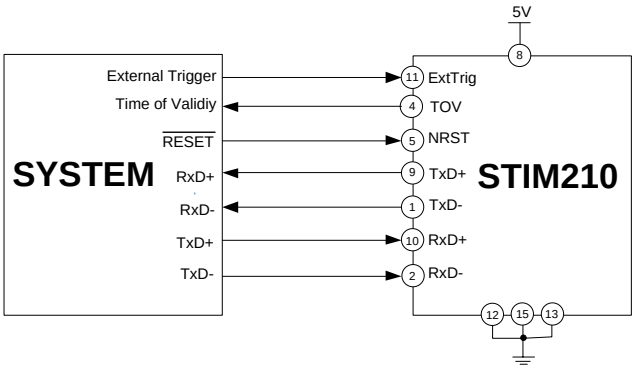


**Figure 8-2: Full Function Electrical Connection Diagram**

### 8.1 Reset

STIM210 has a separate reset pin (NRST) in order for the application to reset the unit without having to toggle power.

The reset is active low and has an internal pull-up. Hence the input could be left floating if not in use.

The reset signal is routed to the reset of the microcontroller and effectively forces STIM210 into Init Mode (ref. Figure 8-6 and chapter 8.4.1).

### 8.2 External Trigger

STIM210 has a separate digital input pin to be used when the unit has been configured to transmit only upon external trigger. The measurements themselves will be continuously running at the highest sample rate (2000 samples/s) in order to ensure shortest possible latency when a transmission is requested. The input is set to trigger on the falling edge of the input signal and will then transmit one datagram containing the result of the latest measurement.

The input has an internal pull-up. Hence the input could be left floating if not in use.

Please note that the commands in Normal Mode are active even if the datagram transmission has been configured to transmit only upon external trigger. This means that e.g. if the Normal Mode command “C” is issued over the RS-422 interface, the STIM210 will transmit a Configuration Datagram independent on the external trigger input. Also when STIM210 is in Init Mode (after Power on or Reset), it will transmit the 3 datagrams as described in section 8.4.1.

The timing diagram is shown in Figure 8-3. Latency is the time between the moment at which the sample has been digitized + low pass-filtered and the external trigger.

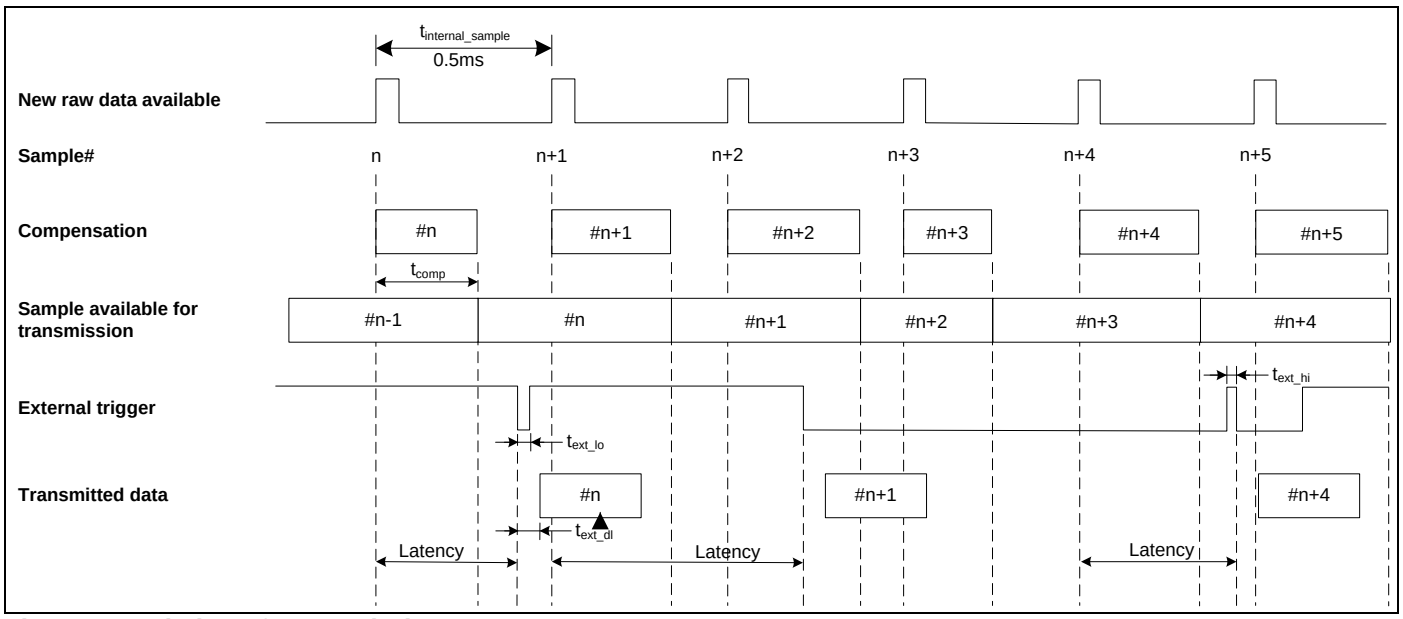


**Figure 8-3: Timing of external trigger**

### 8.3 Time of Validity (TOV)

The TOV-output serves 2 purposes:

- Provide a synchronisation-signal derived from the internal clock of STIM210
- Provide means to signal when a datagram is being transmitted (NB: not when configured to external trigger)

The TOV falling edge occurs synchronous to the sample rate. The raising edge occurs after the last bit of the datagram has been transmitted.

Figure 8-4 and Figure 8-5 show the timing diagram of the TOV-output.

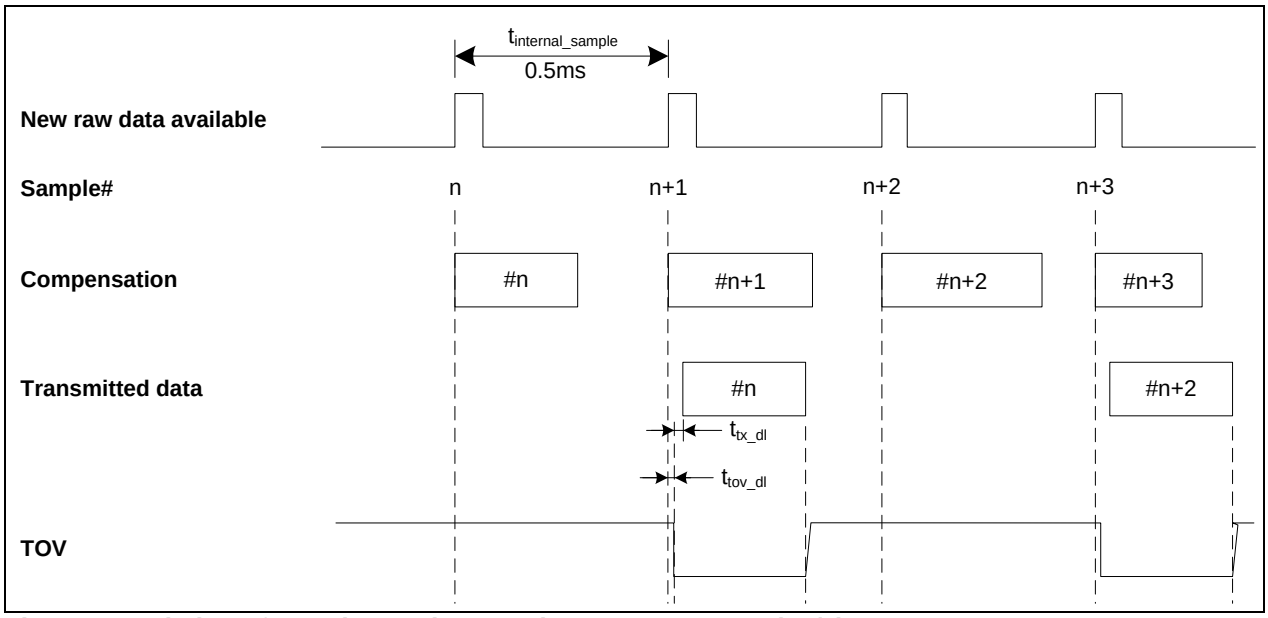


**Figure 8-4: Timing of TOV (example: sample rate = 1000samples/s)**

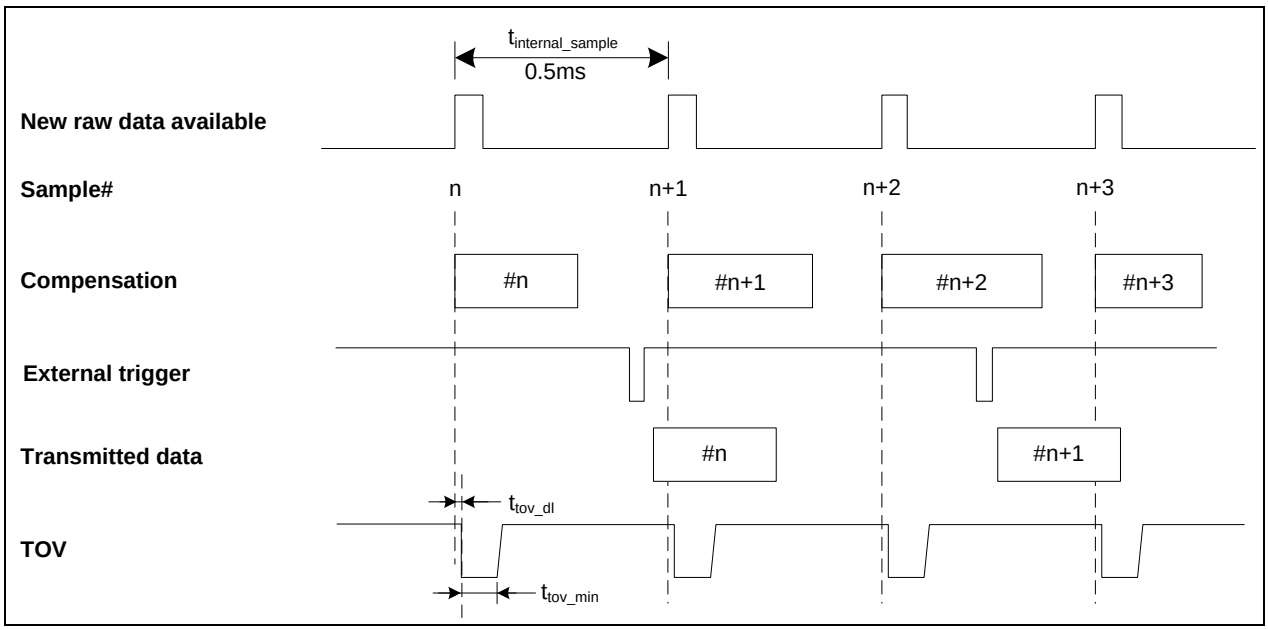


**Figure 8-5: Timing of TOV with external trigger**

### 8.4 Operating modes

The operating modes of STIM210 are shown in Figure 8-6:

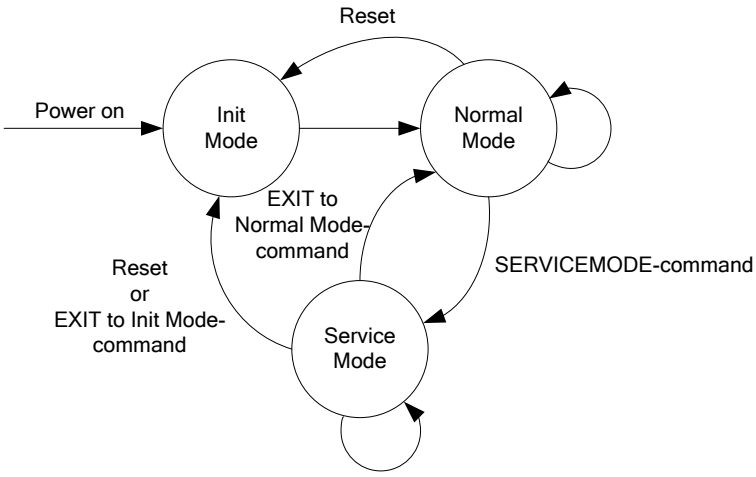


**Figure 8-6: Operating modes**

#### 8.4.1 Init Mode

Init Mode is entered after the following conditions:

- power on
- after an external reset
- when receiving a reset-command in Normal Mode
- when exiting to Init Mode from Service Mode.

In Init Mode the system waits for internal references to settle, resets and synchronizes the sensor channels and transmits three special datagrams containing part number, serial number and configuration data. Please note that length and format of the special datagrams are different to the datagrams in Normal Mode.

Table 6-6 specifies the sequence and contents of the Part Number datagram.
Table 6-7 specifies the sequence and contents of the Serial Number datagram.
Table 6-8 specifies the sequence and contents of the Configuration datagram.

After having transmitted the special Part Number, Serial Number and Configuration datagrams, STIM210 enters Normal Mode. All these special datagrams can also be requested by commands in Normal Mode, ref. chapter 9.

#### 8.4.2 Normal Mode

In Normal Mode STIM210 will constantly measure the gyro channels at an internal sample rate of 2000 samples/s and transmit at the chosen sample rate, alternatively when receiving an external trigger. STIM210 will transmit data regardless of any errors reported in the STATUS byte (ref. Table 6-13). Hence the content of the STATUS byte should continuously be examined.

Table 6-11 specifies the sequence and contents of the datagrams transmitted in Normal Mode.

##### 8.4.2.1 Start-Up

When STIM210 enters Normal Mode from Init Mode, there will be a start-up period where STIM210 is stabilizing the gyros. This is a fixed period as specified in Table 6-2 and bit 6 is set in the STATUS byte (ref. Table 6-13) to communicate this condition. During the start-up period STIM210 will continuously sample, compensate and output data. However the data should not be regarded valid until bit 6 in STATUS byte is cleared.

There will not be any start-up period when STIM210 is exiting from Service Mode directly to Normal Mode.

#### 8.4.2.2 Data output options and interpretation

The gyros in STIM210 measure angular rate [°/s]. However, in order to make the STIM210 more versatile, a few simple functions are offered, ref. Table 8-1:

**Table 8-1: Implemented functions for gyro output units**

| Function | Description of function | Equation | Output unit |
|---|---|---|---|
| Incremental | Adds all internal samples between two transmissions multiplied by the time between internal samples | $Incremental = \sum_{i=1}^{n} AngularRate_i \cdot \frac{1}{2000} s$<br>n = 2000 / sample rate | [°] |
| Average | Calculates the average of the internal samples between two transmissions | $Average = \frac{1}{n} \cdot \sum_{i=1}^{n} AngularRate_i$<br>n = 2000 / sample rate | [°/s] |
| Integrated | Adds all internal samples multiplied by the time between internal samples since start-up / last reset. Note that the result takes values in the interval [-4°, 4°> and will naturally wrap-around with no error-message indication in the Status-byte | $Integrated = \sum_{i=1}^{n} AngularRate_i \cdot \frac{1}{2000} s$<br>n = internal samples (at a rate of 2000 samples/s) since start-up or last reset) | [°] |

##### 8.4.2.2.1 Angular Rate

Angular Rate is available in all datagrams when STIM210 has been configured to output angular rate. The transmitted data will be the last internal sample. E.g. in the case of continuous transmission of datagrams and a sample rate of 250 samples/s, every 8$^{th}$ internally sample will be transmitted.

Equation 1 and Figure 8-7 show how to convert to [°/s]. Note that the output data is represented as two's complement.

**Equation 1: Converting output to [°/s]:**

$$Output[°/s] = \frac{(AR_1) \cdot 2^{16} + (AR_2) \cdot 2^8 + (AR_3)}{2^{14}}$$

where $AR_1$ is the most significant byte of the 24bit output
$AR_2$ is the middle byte of the 24bit output
$AR_3$ is the least significant byte of the 24bit output

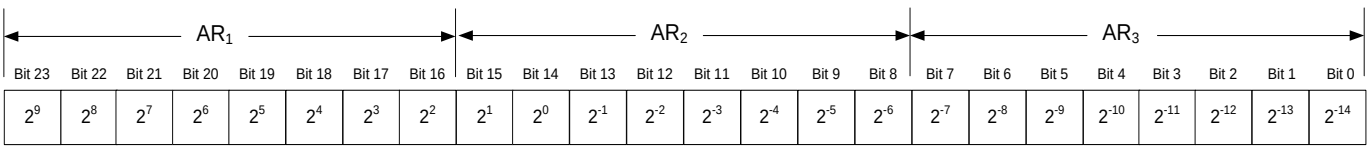


**Figure 8-7: Converting output bytes to [°/s]**

#### 8.4.2.2.2 Incremental angle

Incremental angle is available in all datagrams when STIM210 has been configured to output incremental angle. The transmitted data will be the integrated angle since last transmitted sample. E.g. in the case of continuous transmission of datagrams and a sample rate of 250 samples/s, each transmission will contain the integrated angle of eight internal samples.
Equation 2 and Figure 8-8 show how to convert to [°/sample]. Note that the output data is represented as two's complement:

**Equation 2: Converting output to [°/sample]**

$$Output[°/sample] = \frac{(IA_1)\cdot 2^{16} + (IA_2)\cdot 2^{8} + (IA_3)}{2^{21}}$$

where $IA_1$ is the most significant byte of the 24bit output
$IA_2$ is the middle byte of the 24bit output
$IA_3$ is the least significant byte of the 24bit output

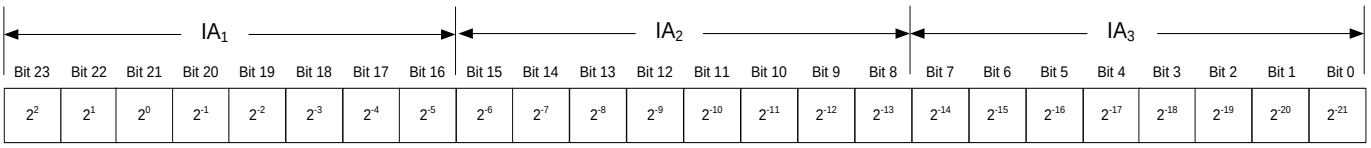


**Figure 8-8: Converting output bytes to [°/samples]**

#### 8.4.2.2.3 Average angular rate

Average angular rate is available in all datagrams when STIM210 has been configured to output average angular rate. The transmitted data will be the average of the samples since last transmission. E.g. in the case of continuous transmission of datagrams and a sample rate of 250 samples/s, each transmission will contain the average of the eight internal samples.

Note that the configured low-pass filtering is performed prior to calculating the average.

Conversion to [°/s] is the same as for angular rate and is described in Equation 1.

#### 8.4.2.2.4 Integrated angle

Integrated angle is available in all datagrams when STIM210 has been configured to output integrated angle. The transmitted data will be continuously integrated angle since power-on or reset. The integrated angle takes values in the interval [-4°,4°> and will naturally wrap around with no error message indication in the Status byte.

Conversion to [°] is the same as for incremental angle and is described in Equation 2.

#### 8.4.2.2.5 Temperature

Temperature data for each axis is available in certain datagrams (ref. chapter 12).

Equation 3 and Figure 8-9 show how to convert to [°C]. Note that the output data is represented as two's complement:

**Equation 3: Converting temperature data to [°C]**

$$Output[°C] = \frac{(T_1)\cdot 2^{8} + (T_2)}{2^{8}}$$

where $T_1$ is the most significant byte of the 16bit output
$T_2$ is the least significant byte of the 16bit output

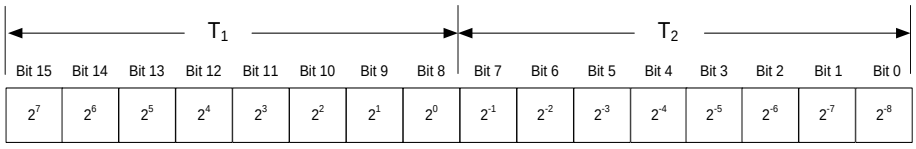


**Figure 8-9: Converting temperature data to [°C]**

#### 8.4.2.2.6 Counter

A counter is available in certain datagrams (ref. chapter 12). Counter is continuously counting the internal samples (2000 samples/s). Counter is an un-signed single byte taking values in the interval [0 , 255]. The counter will naturally wrap-around with no error-message indication in the Status-byte.

#### 8.4.2.2.7 Latency

Latency is available in certain datagrams (ref. chapter 12) with external trigger. Latency is an unsigned word taking values in the interval [0 , 65535] µs.

Equation 4 and Figure 8-10 show how to convert to [seconds]:

**Equation 4: Converting latency data to [seconds]**

$$Output[seconds] = \left((t_1) \cdot 2^8 + (t_2)\right) \cdot 10^{-6}$$

where $t_1$ is the most significant byte of the 16bit output
$t_2$ is the least significant byte of the 16bit output

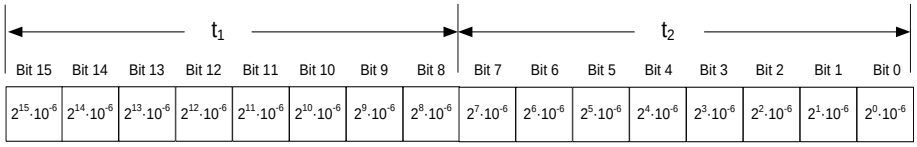


**Figure 8-10: Converting latency data to [seconds]**

### 8.4.3 Service Mode

The communication interface has been designed to be human-readable in Service Mode. This can for example be of great help in the development phase when the device needs to be re-configured during investigations into an observed problem, for example in combination with terminal based software.

When Service Mode is entered, STIM210 will respond with its configuration information (same as the response to the i (INFORMATION) command, ref: Figure 10-1).

A set of commands are available, ref. Chapter 10, enabling the user to change intermediately or permanently the configuration parameters, display latest measurement results, display higher details on error information and perform a full diagnostic of the unit.

In Service Mode the gyro measurements will still be running in the background, enabling to switch directly back to Normal Mode without the need for any stabilisation time of filters, etc. However the measurement data itself, when STIM210 is in Service Mode are not transmitted and therefore lost. By using the a (SINGLE-SHOT MEASUREMENT) command (ref. Chapter 10.2) it is possible to display single measurement results.

Exiting Service Mode can be done in several ways:

1. Using the external reset. This will force STIM210 into Init Mode. Be advised that during Init Mode, all the configuration parameters are loaded from flash. If any of the configuration parameters have been changed during the Service Mode session but not saved to flash, these changes will be overwritten by the content already stored in flash.
2. Using the x (EXIT) command. When using this command a parameter is required to decide whether the device should go to Init Mode or to Normal Mode. When exiting to Normal Mode, any of the changes made to the configuration parameters will still be valid. However, if not saved, the configuration parameters will be overwritten by the content already stored in flash at the next power-up or reset.

## 8.5 Self diagnostics

STIM210 is constantly checking its internal status. The checks include:

- Check of internal references
- Check of gyros (error and overload)
- Check of internal temperatures
- Check of RAM and flash
- Check of supply voltage

A full diagnostic can be run to see the result of the individual checks by using the c (DIAGNOSTIC) command, ref. Chapter 10.3 in SERVICEMODE.

When an error situation is detected, the corresponding bit in the STATUS byte (ref. Table 6-13) will be set. If the sample-rate is set lower than 2000 samples/s, the STATUS byte will reflect the accumulated status of all the sub-samples between two data transmissions. The bits in the STATUS bytes are valid for the data in a single transmission and hence not latched.

Access to extended error registers containing accumulated error-information can be achieved either by using the Normal Mode-command "E" (EXTENDED ERROR INFORMATION DATAGRAM, ref. Table 6-9 and Table 6-10) or the SERVICEMODE-command i e (INFORMATION on ACCUMULATED LAST ERRORS, ref. chapter 10.1).

The extended error registers are cleared at the following events:

- After the start-up phase, triggered by power-on or reset
- After transmission of Extended Error Information Datagram (ref. chapter 9.4)
- After use of SERVICEMODE-command "i e" (INFORMATION on ACCUMULATED LAST ERRORS, ref. chapter 10.1)

# 9 COMMANDS IN NORMAL MODE

Several commands are available in Normal Mode, as listed in Table 9-1. Note that all commands in Normal Mode must be transmitted in upper case letters.

**Table 9-1 Available commands in Normal Mode**

| Command | Short description |
|---|---|
| N | Transmits one Part Number datagram |
| I | Transmits one Serial Number datagram |
| C | Transmits one Configuration datagram |
| E | Transmits one Extended Error Information datagram |
| R | Resets the unit |
| SERVICEMODE | Enters Service Mode |

**Table 9-2 List of special ASCII characters used in Normal Mode**

| Char | Hex | Dec | Short description |
|---|---|---|---|
| <CR> | 0x0D | 13 | “Carriage Return”: used as execution character for commands |

No echo of received command characters nor error messages will appear for these commands. Only at the receipt of the complete correct command, STIM210 executes accordingly.

NB: if OUTPUT UNIT is set to INCREMENTAL ANGLE (ref. Chapter 10.7), the transmitted incremented angle in the datagram following any of the requested special datagrams will NOT contain the incremental angle since the last transmitted measurement. Hence the incremented angle occurring during the transmission of a special requested datagram will be lost.

## 9.1 N (PART NUMBER DATAGRAM) command

General description: Requests transmission of a Part Number datagram (ref. Table 6-6).

**Table 9-3 : Available I (PART NUMBER DATAGRAM) command**

| Syntax | Response |
|---|---|
| **N<CR>** | Transmits one Part Number datagram |

The Part Number datagram will replace the next transmitted Normal Mode datagram.

If sample rate is set to external trigger, the Part Number datagram will be transmitted at the next trigger signal.

## 9.2 I (SERIAL NUMBER DATAGRAM) command

General description: Requests transmission of a Serial number datagram (ref. Table 6-7).

**Table 9-4 : Available I (SERIAL NUMBER DATAGRAM) command**

| Syntax | Response |
|---|---|
| **I<CR>** | Transmits one Serial Number datagram |

The Serial Number datagram will replace the next transmitted Normal Mode datagram.

If sample rate is set to external trigger, the Serial Number datagram will be transmitted at the next trigger signal.

### 9.3 C (CONFIGURATION DATAGRAM) command

General description: Requests transmission of a configuration datagram (ref. Table 6-8).

**Table 9-5: Available C (CONFIGURATION DATAGRAM) command**

| Syntax | Response |
|---|---|
| **C<CR>** | Transmits one Configuration datagram |

The Configuration datagram will replace the next transmitted Normal Mode datagram.

If sample rate is set to external trigger, the Configuration datagram will be transmitted at the next trigger signal.

### 9.4 E (EXTENDED ERROR INFORMATION DATAGRAM) command

General description: Requests transmission of an Extended Error Information datagram (ref. Table 6-9). This datagram contains the accumulated detected errors (ref. chapter 8.5).

Once the Extended Error Information datagram has been transmitted, the error-registers are cleared.

**Table 9-6: Available E (EXTENDED ERROR INFORMATION) command**

| Syntax | Response |
|---|---|
| **E<CR>** | Resets the unit |

The Extended Error Information datagram will replace the next transmitted Normal Mode datagram.

If sample rate is set to external trigger, the Extended Error Information datagram will be transmitted at the next trigger signal.

### 9.5 R (RESET) command

General description: Force a Reset (ref. Figure 8-6).

**Table 9-7: Available R (RESET) command**

| Syntax | Response |
|---|---|
| **R<CR>** | Resets the unit |

### 9.6 SERVICEMODE command

General description : Enters Service Mode (ref. chapter 8.4.3).

**Table 9-8: Available SERVICEMODE command**

| Syntax | Response |
|---|---|
| **SERVICEMODE<CR>** | Enters Service Mode |

If the command is received during the transmission of a datagram, it will complete the transmission before entering Service Mode.

When entering Service Mode, the configuration and identification data of the device will be listed, as shown in Figure 9-1:

```
SERIAL NUMBER = N25580846002002
PRODUCT = STIM210XZ
PART NUMBER = 84192-1034-0121 REV F
HW CONFIG = M5673 REV 4
FW CONFIG = SWD11860 REV 8
OUTPUT UNIT = [°/sample] – INCREMENTAL ANGLE
SAMPLE RATE [samples/s] = 1000
GYRO CONFIG = XZ
GYRO RANGE:
  X-AXIS: ± 400°/s
  Y-AXIS: NA
  Z-AXIS: ± 400°/s
LP FILTER -3dB FREQUENCY, X-AXIS [Hz] = 262
LP FILTER -3dB FREQUENCY, Y-AXIS [Hz] = NA
LP FILTER -3dB FREQUENCY, Z-AXIS [Hz] = 262
DATAGRAM FORMAT = STANDARD
BIT-RATE [bits/s] = 374400
DATA LENGTH = 8
STOP-BITS = 1
PARITY = EVEN
LINE TERMINATION = ON
DATAGRAM TERMINATION = NONE

>
```

**Figure 9-1: Example of response from SERVICEMODE command**

## 10 COMMANDS IN SERVICE MODE

Several commands are available in Service Mode, as listed in Table 10-1. Note that all commands in Service Mode must be transmitted in lower case letters.

**Table 10-1 Available commands in Service Mode**

| Command | Short description |
|---|---|
| i | Lists specific information (e.g. serial number, configuration, error information) |
| a | Performs a single-shot measurement |
| c | Performs a diagnostic of the unit |
| d | Changes datagram format |
| t | Changes transmission parameters (e.g. bit-rate, data length, stop-bits) |
| r | Changes line termination and datagram termination |
| u | Changes measurement output unit |
| f | Changes LP filter -3dB frequency |
| m | Changes sample rate |
| s | Saves configuration data |
| x | Exits Service Mode and returns to Normal Mode or Init Mode |
| z | Restore to factory settings |
| ? | Help function on the available commands in Service Mode |

**Table 10-2 List of special ASCII characters used in Service Mode**

| Char | Hex | Dec | Short description |
|---|---|---|---|
| <BS> | 0x08 | 8 | “Back Space”: deletes last received character (received since last <CR>) |
| <CR> | 0x0D | 13 | “Carriage Return”: typically used as execution character for commands |
| <SP> | 0x20 | 32 | “Space”: used to separate command and first parameter |
| ‘,’ | 0x2C | 44 | “Comma”: used to separate parameters in a command |
| ‘>’ | 0x3E | 62 | Used together with <CR> as: “Ready to receive new command” prompt |

When STIM210 is in Service Mode and ready to receive a new command, it will issue the special ASCII character <CR> followed by ‘>’. As some commands (e.g. SINGLE-SHOT MEASUREMENT command) may respond with a varying number of lines, automated set-ups should look for the special prompt sequence (<CR>+’>’) before issuing a new command.

Received characters will be echoed. A command is decoded and executed when receiving the special ASCII character <CR>. <BS> is also recognised and will delete the last received character in the input buffer. The size of the input buffer is 80 characters. <BS> is valid for the characters received since last <CR>.

The command character and first parameter (when applicable) are separated by a space (character 0x20). When there are more than one parameter to a command (e.g. TRANSMISSION PARAMETER command), these must be separated by a comma (character 0x2C).

In the event of an unknown command, inconsistent syntax or incorrect value of parameter(s), STIM210 will respond with an error message. Error messages are on the format:

E<nnn><SP><Error description><CR>
where nnn is an error number

### 10.1 i (INFORMATION) command

General description: Lists various requested information about the device

**Table 10-3 : Available i (INFORMATION) commands**

| Syntax | Response |
|---|---|
| **i<CR>** | Lists the product configuration and identification data |
| **i<SP><cmd><CR>** | Gives information about the specific parameter |

**Table 10-4 : Allowed values for <cmd> parameter for i (INFORMATION) commands**

| <cmd> | Result |
|---|---|
| **s** | Returns the serial number of the device |
| **n** | Returns the product name of the device |
| **x** | Returns the part number of the device |
| **a** | Returns the axis configuration of the device |
| **h** | Returns the HW configuration and revision of the device |
| **p** | Returns the FW configuration and revision of the device |
| **m** | Returns the sample rate of the device |
| **f** | Returns the LP filter -3dB frequency for each axis |
| **d** | Returns the datagram format |
| **t** | Returns the transmission parameters of the device |
| **r** | Returns the line termination and datagram termination |
| **u** | Returns the output unit of the device |
| **e** | Prints the extended error information from the accumulated detected error(s) since last error read-out in Service Mode or by the E-command in Normal Mode (ref. section 9.4) |

**Table 10-5: Error messages for i (INFORMATION) commands**

| Error | Message | Possible reason |
|---|---|---|
| E001 | UNKOWN COMMAND | Command or parameter is not recognised |
| E002 | INCORRECT NUMBER OF PARAMETERS | Too many or too few parameters, use of comma between command and first parameter |

```
>i
SERIAL NUMBER = N25580846002002
PRODUCT = STIM210XZ
PART NUMBER = 84192-1034-0121 REV F
HW CONFIG = M5673 REV 4
FW CONFIG = SWD11860 REV 8
OUTPUT UNIT = [°/sample] – INCREMENTAL ANGLE
SAMPLE RATE [samples/s] = 1000
GYRO CONFIG = XZ
GYRO RANGE:
  X-AXIS: ± 400°/s
  Y-AXIS: NA
  Z-AXIS: ± 400°/s
LP FILTER -3dB FREQUENCY, X-AXIS [Hz] = 262
LP FILTER -3dB FREQUENCY, Y-AXIS [Hz] = NA
LP FILTER -3dB FREQUENCY, Z-AXIS [Hz] = 262
DATAGRAM TERMINATION = NONE
BIT-RATE [bits/s] = 374400
DATA LENGTH = 8
STOP-BITS = 1
PARITY = EVEN
LINE TERMINATION = ON
DATAGRAM FORMAT = STANDARD

>
```

**Figure 10-1: Example of response from i (INFORMATION) command**

```
>i s
SERIAL NUMBER = N25580846002002

>
```

**Figure 10-2: Example of response from i s (INFORMATION on SERIAL NUMBER) command**

```
>i n
PRODUCT = STIM210XZ

>
```

**Figure 10-3: Example of response from i n (INFORMATION on PRODUCT NAME) command**

```
>i x
PART NUMBER = 84192-1034-0121 REV F

>
```

**Figure 10-4: Example of response from i x (INFORMATION on PART NUMBER) command**

```
>i a
GYRO CONFIG = XZ
GYRO RANGE:
  X-AXIS: ± 400°/s
  Y-AXIS: NA
  Z-AXIS: ± 400°/s

>
```

**Figure 10-5: Example of response from i a (INFORMATION on AXIS CONFIGURATION) command**

```
>i h
HW CONFIG = M5673 REV 4

>
```

**Figure 10-6: Example of response from i h (INFORMATION on HW CONFIGURATION) command**

```
>i p
FW CONFIG = SWD11860 REV 8

>
```

**Figure 10-7: Example of response from i p (INFORMATION on FW CONFIGURATION) command**

```
>i m
SAMPLE RATE [samples/s] = 1000

>
```

**Figure 10-8: Example of response from i m (INFORMATION on SAMPLE RATE) command**

```
>i f
LP FILTER -3dB FREQUENCY, X-AXIS [Hz] = 262
LP FILTER -3dB FREQUENCY, Y-AXIS [Hz] = NA
LP FILTER -3dB FREQUENCY, Z-AXIS [Hz] = 262

>
```

**Figure 10-9: Example of response from i f (INFORMATION on LP FILTER -3dB FREQUENCY) command**

```
>i d
DATAGRAM FORMAT = STANDARD

>
```

**Figure 10-10: Example of response from i d (INFORMATION on DATAGRAM CONTENT) command**

```
>i t
BIT-RATE [bits/s] = 374400
DATA LENGTH = 8
STOP-BITS = 1
PARITY = EVEN

>
```

**Figure 10-11: Example of response from i t (INFORMATION on TRANSMISSION PARAMETERS) command**

```
>i r
LINE TERMINATION = ON
DATAGRAM TERMINATION = NONE

>
```

**Figure 10-12: Example of response from i r (INFORMATION) command**

```
>i u
OUTPUT UNIT = [°/sample] – INCREMENTAL ANGLE

>
```

**Figure 10-13: Example of response from i u (INFORMATION on OUTPUT UNIT) command**

```
>i e
GYRO X-AXIS I-CH OVERFLOW = FAILED

>
```

**Figure 10-14: Example of response from i e (INFORMATION on LAST ERROR IN NORMAL MODE) command**

### 10.2 a (SINGLE-SHOT MEASUREMENT) command

General description: Displays the result of latest measurement (measurement process running constantly in the background).

If sample rate has been set to external trigger, the SINGLE-SHOT MEASUREMENT will respond to the measurement result at the latest trigger. Hence if no trigger is received, the command will respond with the same data if sent multiple times.

**Table 10-6: Available a (SINGLE-SHOT MEASUREMENT) command**

| Syntax | Response |
|---|---|
| **a<CR>** | Displays the result of the latest measurement sample |

**Table 10-7: Error messages for a (SINGLE-SHOT MEASUREMENT) command**

| Error | Message | Possible reason |
|---|---|---|
| E001 | UNKOWN COMMAND | Command is incorrectly entered |
| E002 | INCORRECT NUMBER OF PARAMETERS | Any characters between command and <CR> |

```
>a
X-AXIS = 1.43255°/s
Y-AXIS = NA
Z-AXIS = 243.33667°/s
STATUS = 00000000 = OK

>
```

**Figure 10-15: Example of response from a (SINGLE-SHOT MEASUREMENT) command**

```
>a
X-AXIS = 0.000716275°
Y-AXIS = NA
Z-AXIS = 0.121668335°
STATUS = 00100101 = NOT OK
BIT 5: OUTSIDE OPERATING CONDITIONS
BIT 2: ERROR IN Z-CHANNEL
BIT 0: ERROR IN X-CHANNEL

>
```

**Figure 10-16: Example of response from a (SINGLE-SHOT MEASUREMENT) command with error flagging**

### 10.3 c (DIAGNOSTIC) command

General description: Performs a diagnostic of the unit.

**Table 10-8: Available c (DIAGNOSTIC) command**

| Syntax | Response |
|---|---|
| **c<CR>** | Performs a diagnostic check |

**Table 10-9: Error messages for c (DIAGNOSTIC) command**

| Error | Message | Possible reason |
|---|---|---|
| E001 | UNKOWN COMMAND | Command is incorrectly entered |
| E002 | INCORRECT NUMBER OF PARAMETERS | Any characters between command and <CR> |

```
>c
SERIAL NUMBER = N25581025644346
PRODUCT = STIM210XZ
PART NUMBER = 84192-1034-0121 REV F
HW CONFIG = M5673 REV 4
FW CONFIG = SWD11860 REV 8
SYSTEM STATUS:
  RAM CHECK = OK
  FLASH CHECK = OK
  STACK STATUS MONITOR  = OK
  STACK COMMAND HANDLER  = OK
  STACK SAMPLE  = OK
  STACK FLASH  = OK
  MICRO CONTROLLER TEMPERATURE  = OK
VOLTAGE SUPPLIES:
  REFERENCE VOLTAGE 5.0V = OK
  REFERENCE VOLTAGE 2.5V = OK
  REFERENCE VOLTAGE 2.048V = OK
  REGULATED VOLTAGE 5.0V  = OK
  REGULATED VOLTAGE 1.8V  = OK
  INPUT VOLTAGE 5.0V = OK
  VOLTAGE BOOST = OK
GYRO X-AXIS:
  GYRO X-AXIS Data Ready = OK
  GYRO X-AXIS EXC.FREQ = OK
  GYRO X-AXIS ASIC TEMP = OK
  GYRO X-AXIS SENSOR TEMP = OK
  GYRO X-AXIS COMPENSATED RATE SIGNAL = OK
  GYRO X-AXIS DASIC COMMUNICATION = OK
  GYRO X-AXIS Q-CH RANGE = OK
  GYRO X-AXIS I-CH RANGE = OK
  GYRO X-AXIS DET. DC = OK
  GYRO X-AXIS EXC. DC = OK
  GYRO X-AXIS SPI = OK
  GYRO X-AXIS EXC.AMPL = OK
  GYRO X-AXIS OVERRUN = OK
  GYRO X-AXIS DAC = OK
GYRO Z-AXIS:
  GYRO Z-AXIS Data Ready = OK
  GYRO Z-AXIS EXC.FREQ = OK
  GYRO Z-AXIS ASIC TEMP = OK
  GYRO Z-AXIS SENSOR TEMP = OK
  GYRO Z-AXIS COMPENSATED RATE SIGNAL = OK
  GYRO Z-AXIS DASIC COMMUNICATION = OK
  GYRO Z-AXIS Q-CH RANGE = OK
  GYRO Z-AXIS I-CH RANGE = OK
  GYRO Z-AXIS DET. DC = OK
  GYRO Z-AXIS EXC. DC = OK
  GYRO Z-AXIS SPI = OK
  GYRO Z-AXIS EXC.AMPL = OK
  GYRO Z-AXIS OVERRUN = OK
  GYRO Z-AXIS DAC = OK

>
```

**Figure 10-17: Example of response from c (DIAGNOSTIC) command**

### 10.4 d (DATAGRAM FORMAT) command

General description: Changes the datagram format in Normal Mode (ref.Table 6-11).

Note that the datagram format could be considered invalid, even if it has been entered correctly. This is because a valid datagram format also depends on the chosen sample rate and bit rate (ref. Table 6-12 and error message E007 in Table 10-12).

Note that this change will only be effective until STIM210 is initialized, reset or powered off, unless the new setting has been stored in flash using the SAVE-command (ref. chapter 10.10). In order to use or test a new setting in Normal Mode without permanently storing it, this can be achieved by using the EXIT n-command (ref. chapter 10.11).

**Table 10-10 : Available d (DATAGRAM FORMAT) command**

| Syntax | Response |
|---|---|
| **d<SP><d_format><CR>** | Changes the datagram format in Normal Mode |

**Table 10-11 : Allowed values for d (DATAGRAM FORMAT) command**

| <d_format> | Result |
|---|---|
| **s** | Changes the datagram format in Normal Mode to standard format |
| **e** | Changes the datagram format in Normal Mode to extended format |
| **j** | Changes the datagram format in Normal Mode to rate and temperature |
| **k** | Changes the datagram format in Normal Mode to rate and counter |
| **l** | Changes the datagram format in Normal Mode to rate and latency |
| **m** | Changes the datagram format in Normal Mode to rate, counter and latency |
| **n** | Changes the datagram format in Normal Mode to rate, temperature and counter |
| **o** | Changes the datagram format in Normal Mode to rate, temperature and latency |
| **p** | Changes the datagram format in Normal Mode to rate, temperature, counter and latency |

**Table 10-12: Error messages for d (DATAGRAM FORMAT) command**

| Error | Message | Possible reason |
|---|---|---|
| E001 | UNKOWN COMMAND | Command is incorrectly entered |
| E002 | INCORRECT NUMBER OF PARAMETERS | Too many or too few parameters, use of comma between command and first parameter |
| E003 | INVALID PARAMETER | Value of parameter outside valid range |
| E007 | DATAGRAM WILL BE TOO LONG TO TRANSMIT | Combination of bit-rate, sample rate and datagram content results in a datagram that cannot be transmitted |

```
>d s
DATAGRAM FORMAT = STANDARD

>
```

**Figure 10-18: Example of response from d s (DATAGRAM FORMAT) command**

```
>d e
DATAGRAM FORMAT = EXTENDED

>
```

**Figure 10-19: Example of response from d e (DATATGRAM FORMAT) command**

```
>d m
DATAGRAM FORMAT = RATE, COUNTER AND LATENCY

>
```

**Figure 10-20: Example of response from d m (DATATGRAM FORMAT) command**

### 10.5 t (TRANSMISSION PARAMETERS) command

General description: Changes the transmission parameters for the RS422 interface.

Note that the bit-rate could be considered invalid, even if it has been entered correctly. This is because a valid bit-rate also depends on the sample rate and chosen datagram content (ref. Table 6-12 and error message E007 in Table 10-16).

Note that this change will only be effective until STIM210 is initialized, reset or powered off, unless the new setting has been stored in flash using the SAVE-command (ref. chapter 10.10). If confirmation to the SAVE-command is not "Y", the transmission parameters will be reset to the previously stored settings. In order to use or test a new setting in Normal Mode without permanently storing it, this can be achieved by using the EXIT n-command (ref. chapter 10.11).

**Table 10-13 : Available t (TRANSMISSION PARAMETERS) commands**

| Syntax | Response |
|---|---|
| **t<SP><bit-rate><CR>** | Changes the transmission bit-rate and leaves number of stop-bits and parity unchanged |
| **t<SP><bit-rate>’,’<stop-bits>’,’<parity><CR>** | Changes the transmission bit-rate, number of stop-bits and parity |

**Table 10-14: Allowed values for <stop-bits> parameter for t (TRANSMISSION PARAMETERS) commands**

| <stop-bits> | Result |
|---|---|
| **1** | Will set number of stop-bits to 1 |
| **2** | Will set number of stop-bits to 2 |

**Table 10-15: Allowed values for <parity> parameter for t (TRANSMISSION PARAMETERS) commands**

| <stop-bits> | Result |
|---|---|
| **n** | Will set no parity |
| **e** | Will set even parity |
| **o** | Will set odd parity |

The STIM210 hardware is capable of setting bit-rates in the range between 1500 and 3 750 000 bits/s. However, the sample rate and the datagram length decide the minimum bit-rate possible, ref. Equation 5:

**Equation 5: Minimum bit-rate**

$$Bit-rate_{MIN} = 1.1 \cdot bits \cdot bytes \cdot sample_rate$$

where bits = start-bit (1) + data-bits (8) + stop-bits (1 or 2) + parity-bit (0 or 1)
bytes = number of bytes in the chosen datagram, ref. Table 6-11 and Table 6-12 (NB: number of bytes in Table 6-12 includes <CR><LF>)
sample_rate is the chosen sample rate [samples/s]

If a bit-rate, lower than the allowed bit-rate defined by Equation 5, is entered, the command will respond with error message E007, ref. Table 10-16.

There are a finite number of bit-rates possible to set. This is defined in Equation 6:

**Equation 6: Set bit-rate**

$$Bit-rate_{SET} = \frac{59904000}{n} bits/s$$

where n is an integer

The actually set bit-rate will hence be the closest to requested bit-rate. The response of the t (TRANSMISSION PARAMETERS)-command will be the set bit-rate. Be aware that for certain bit-rates above 1.2Mbit/s, the deviation between the requested bit-rate and set bit-rate could be larger than 1% and may be in conflict with the RS422 specification. No warnings are issued related to this issue. As a safety precaution, the new bit-rate can only be permanently set by the s (SAVE)-command later using the new bit-rate.

**Table 10-16: Error messages for t (TRANSMISSION PARAMETERS) commands**

| Error | Message | Possible reason |
|---|---|---|
| E001 | UNKOWN COMMAND | Command is incorrectly entered |
| E002 | INCORRECT NUMBER OF PARAMETERS | Too many or too few parameters, use of comma between command and first parameter |
| E003 | INVALID PARAMETER | Value of parameter outside valid range |
| E007 | DATAGRAM WILL BE TOO LONG TO TRANSMIT | Combination of bit-rate, sample rate and datagram content results in a datagram that cannot be transmitted |

```
>t 460800,2,e
TRANSMISSION PROTOCOL = 460800 bits/s, 2 STOP-BIT(S), EVEN PARITY

>
```

**Figure 10-21: Example of response from t (TRANSMISSION PARAMETERS) command**

```
>t 500000
TRANSMISSION PROTOCOL = 499200 bits/s, 2 STOP-BIT(S), EVEN PARITY

>
```

**Figure 10-22: Example of response from t (TRANSMISSION PARAMETERS) command**

Transmission parameters will change after the response as shown in Figure 10-21 or Figure 10-22 has been given.

### 10.6 r (TERMINATION) command

General description: Changes the line termination and datagram termination. Line termination should be ON when communicating point-to-point (single master – single slave).

Note that this change will only be effective until STIM210 is initialized, reset or powered off, unless the new setting has been stored in flash using the SAVE-command (ref. chapter 10.10). In order to use or test a new setting in Normal Mode without permanently storing it, this can be achieved by using the EXIT n-command (ref. chapter 10.11).

**Table 10-17: Available r (TERMINATION) command**

| Syntax | Response |
|---|---|
| **r<SP><term><CR>** | Changes the line termination and datagram termination |

**Table 10-18: Allowed values for r (TERMINATION) command**

| <term> | Result |
|---|---|
| **0** | Turns line termination = OFF, datagram termination = none |
| **1** | Turns line termination = ON, datagram termination = none |
| **2** | Turns line termination = OFF, datagram termination = <CR><LF> |
| **3** | Turns line termination = ON, datagram termination = <CR><LF> |

**Table 10-19: Error messages for r (TERMINATION) command**

| Error | Message | Possible reason |
|---|---|---|
| E001 | UNKOWN COMMAND | Command is incorrectly entered |
| E002 | INCORRECT NUMBER OF PARAMETERS | Too many or too few parameters, use of comma between command and first parameter |
| E003 | INVALID PARAMETER | Value of parameter outside valid range |

```
>r 0
LINE TERMINATION = OFF
DATAGRAM TERMINATION = NONE

>
```

**Figure 10-23: Example of response from r 0 (TERMINATION) command**

```
>r 3
LINE TERMINATION = ON
DATAGRAM TERMINATION = <CR><LF>

>
```

**Figure 10-24: Example of response from r 3 (TERMINATION) command**

### 10.7 u (OUTPUT UNIT) command

General description: Sets the unit of the transmission in Normal Mode to angular rate or incremental angle.

Note that this change will only be effective until STIM210 is initialized, reset or powered off, unless the new setting has been stored in flash using the SAVE-command (ref. chapter 10.10). In order to use or test a new setting in Normal Mode without permanently storing it, this can be achieved by using the EXIT n-command (ref. chapter 10.11).

**Table 10-20: Available u (OUTPUT UNIT) command**

| Syntax | Response |
|---|---|
| **u<SP><outunit><CR>** | Changes the unit of the transmission in Normal Mode |

**Table 10-21: Allowed values for <outunit> for u (OUTPUT UNIT) command**

| <outunit> | Result |
|---|---|
| **a** | Changes the unit of the transmission in Normal Mode to angular rate [°/s] |
| **i** | Changes the unit of the transmission in Normal Mode to incremental angle [°/sample] |
| **m** | Changes the unit of the transmission in Normal Mode to average angular rate [°/s] |
| **s** | Changes the unit of the transmission in Normal Mode to integrated angle [°] |

**Table 10-22: Error messages for u (OUTPUT UNIT) command**

| Error | Message | Possible reason |
|---|---|---|
| E001 | UNKOWN COMMAND | Command is incorrectly entered |
| E002 | INCORRECT NUMBER OF PARAMETERS | Too many or too few parameters, use of comma between command and first parameter |
| E003 | INVALID PARAMETER | Value of parameter outside valid range |

```
>u a
OUTPUT UNIT = [°/s] – ANGULAR RATE

>
```

**Figure 10-25: Example of response from u a (OUTPUT UNIT) command**

```
>u i
OUTPUT UNIT = [°/sample] – INCREMENTAL ANGLE

>
```

**Figure 10-26: Example of response from u i (OUTPUT UNIT) command**

```
>u m
OUTPUT UNIT = [°/s] – AVERAGE ANGULAR RATE

>
```

**Figure 10-27: Example of response from u m (OUTPUT UNIT) command**

```
>u s
OUTPUT UNIT = [°] – INTEGRATED ANGLE

>
```

**Figure 10-28: Example of response from u s (OUTPUT UNIT) command**

### 10.8 f (LP FILTER -3dB FREQUENCY) command

General description: Changes the low-pass filter -3dB frequency for one or all axes.

Note that filter settings should be considered together with the sample rate in order to avoid issues with folding due to undersample. No warnings will be issued by STIM210 if e.g. a high filter bandwidth and a low sample rate have been chosen. Also note that change in filter setting will change the group delay, ref.Table 6-5.

Note that this change will only be effective until STIM210 is initialized, reset or powered off, unless the new setting has been stored in flash using the SAVE-command (ref. chapter 10.10). In order to use or test a new setting in Normal Mode without permanently storing it, this can be achieved by using the EXIT n-command (ref. chapter 10.11).

**Table 10-23: Available f (LP FILTER -3dB FREQUENCY) commands**

| Syntax | Response |
|---|---|
| **f<SP><-3dBfreq><CR>** | Changes the LP filter -3dB frequency for all axes |
| **f<SP><-3dBfreq>','<axis><CR>** | Changes the LP filter -3dB frequency for a specified axis |

**Table 10-24: Allowed values for <-3dBfreq> parameter for f (LP FILTER -3dB FREQUENCY) commands**

| <-3dBfreq> | Result |
|---|---|
| **16** | Will change LP filter -3dB frequency to 16Hz |
| **33** | Will change LP filter -3dB frequency to 33Hz |
| **66** | Will change LP filter -3dB frequency to 66Hz |
| **131** | Will change LP filter -3dB frequency to 131Hz |
| **262** | Will change LP filter -3dB frequency to 262Hz |

**Table 10-25: Allowed values for <axis> parameter for f (LP FILTER -3dB FREQUENCY) commands**

| <axis> | Result |
|---|---|
| **x** | Will change LP filter -3dB frequency for X-axis only |
| **y** | Will change LP filter -3dB frequency for Y-axis only |
| **z** | Will change LP filter -3dB frequency for Z-axis only |

**Table 10-26: Error messages for f (LP FILTER -3dB FREQUENCY) commands**

| Error | Message | Possible reason |
|---|---|---|
| E001 | UNKOWN COMMAND | Command is incorrectly entered |
| E002 | INCORRECT NUMBER OF PARAMETERS | Too many or too few parameters, use of comma between command and first parameter |
| E003 | INVALID PARAMETER | Value of parameter outside valid range |

```
>f 66,x
LP FILTER -3dB FREQUENCY = 66 Hz FOR X-AXIS

>
```

**Figure 10-29: Example of response from f (LP FILTER -3dB FREQUENCY) command**

```
>f 131
LP FILTER -3dB FREQUENCY = 131 Hz FOR ALL AXES

>
```

**Figure 10-30: Example of response from f (LP FILTER -3dB FREQUENCY) command**

### 10.9 m (SAMPLE RATE) command

General description: Changes the sample rate in Normal Mode. The sample rate is the same for all gyro channels.

Note that the sample rate could be considered invalid, even if it has been entered correctly. This is because a valid sample rate also depends on the bit rate and chosen datagram content (ref. Table 6-12 and error message E007 in Table 10-29).

Note that sample rate should be considered together with filter settings in order to avoid issues with folding due to undersampling. No warnings will be issued by STIM210 if e.g. a high filter bandwidth and a low sample rate have been chosen.

Note that this change will only be effective until STIM210 is initialized, reset or powered off, unless the new setting has been stored in flash using the SAVE-command (ref. chapter 10.10). In order to use or test a new setting in Normal Mode without permanently storing it, this can be achieved by using the EXIT n-command (ref. chapter 10.11).

**Table 10-27: Available m (SAMPLE RATE) command**

| Syntax | Response |
|---|---|
| **m<SP><sampl.freq><CR>** | Changes the sample rate in Normal Mode |

**Table 10-28: Allowed values for <sampl.freq> parameter for m (SAMPLE RATE) command**

| <sampl.freq> | Result |
|---|---|
| **125** | Will set sample rate to 125 samples /second |
| **250** | Will set sample rate to 250 samples /second |
| **500** | Will set sample rate to 500 samples /second |
| **1000** | Will set sample rate to 1000 samples /second |
| **2000** | Will set sample rate to 2000 samples /second |
| **0** | Enables External Trigger |

**Table 10-29: Error messages for m (SAMPLE RATE) command**

| Error | Message | Possible reason |
|---|---|---|
| E001 | UNKOWN COMMAND | Command is incorrectly entered |
| E002 | INCORRECT NUMBER OF PARAMETERS | Too many or too few parameters, use of comma between command and first parameter |
| E003 | INVALID PARAMETER | Value of parameter outside valid range |
| E007 | DATAGRAM WILL BE TOO LONG TO TRANSMIT | Combination of bit-rate, sample rate and datagram content results in a datagram that cannot be transmitted |

```
>m 500
SAMPLE RATE = 500 samples/s

>
```

**Figure 10-31: Example of response from m (SAMPLE RATE) command**

```
>m 0
SAMPLE RATE = EXTERNAL TRIGGER

>
```

**Figure 10-32: Example of response from m (SAMPLE RATE) command**

### 10.10 s (SAVE) command

General description: Saves configuration parameters to flash. This will permanently change the configuration parameters and hence be valid after an initialisation or power-off.

The flash used in STIM210 is specified to be capable of minimum 1000 saves. A save-counter has been implemented and when the number of saves exceeds 1000, there will be issued a warning. STIM210 will always attempt to save the configuration when receiving the s (SAVE) command regardless of the content of the save-counter.

**Table 10-30: Available s (SAVE) command**

| Syntax | Response |
|---|---|
| **s<CR>** | Saves system parameters to flash. This command will require an additional confirmation prior to execution. Confirmation ("Y") to be responded in upper case letter.<br>If transmission parameters have been changed (ref. TRANSMISSION PARAMETERS command, section 10.5) AND confirmation to the save-command is not "Y", then the transmission parameters, including bit-rate, will be reset to the previously saved settings |

**Table 10-31: Error messages for s (SAVE) command**

| Error | Message | Possible reason |
|---|---|---|
| E001 | UNKOWN COMMAND | Command is incorrectly entered |
| E002 | INCORRECT NUMBER OF PARAMETERS | Any characters between command and <CR> |
| E003 | INVALID PARAMETER | Value of parameter outside valid range |
| E004 | EXCEEDED MAXIMUM NUMBER OF SAVES | Warning appears when maximum number of saves has been exceeded (1000 saves). STIM210 will always attempt to save the configuration when receiving the s (SAVE) command. |
| E005 | ERROR DURING SAVE | System parameters not successfully transferred to flash |

```
>s
SYSTEM PARAMETERS WILL BE PERMANENTLY CHANGED. CONFIRM SAVE(Y/N): Y
SYSTEM PARAMETERS SUCCESSFULLY STORED IN FLASH.
NUMBER OF SAVES = 26

>
```

**Figure 10-33: Example of response from s (SAVE) command when confirming save**

```
>s
SYSTEM PARAMETERS WILL BE PERMANENTLY CHANGED. CONFIRM SAVE(Y/N): N
SAVE COMMAND ABORTED.

>
```

**Figure 10-34: Example of response from s (SAVE) command when not confirming save**

```
>s
SYSTEM PARAMETERS WILL BE PERMANENTLY CHANGED. CONFIRM SAVE(Y/N): y
SAVE COMMAND ABORTED.

E003 INVALID PARAMETER

>
```

**Figure 10-35: Example of response from s (SAVE) command when not correctly responding to confirmation**

### 10.11 x (EXIT) command

General description: Terminates Service Mode and returns to Normal Mode directly or via Init Mode (ref. Figure 8-6).

**Table 10-32 : Available x (EXIT) command**

| Syntax | Response |
|---|---|
| **x<SP><exit_to><CR>** | Terminates Service Mode |

**Table 10-33 : Allowed values for <exit_to> for x (EXIT) command**

| <exit_to> | Result |
|---|---|
| **n** | Terminates Service Mode and return to Normal Mode. If system parameters have been changed compared to flash content, a confirmation is requested before exiting to Normal Mode ("Y" in upper case letter). There will be a 3 seconds hold time between the transmitted command response and execution of the EXIT command. |
| **i** | Terminates Service Mode and return to Init Mode. If system parameters have been changed compared to flash content, a confirmation is requested before exiting to Normal Mode ("Y" in upper case letter). There will be a 3 seconds hold time between the transmitted command response and execution of the EXIT command.<br>**NB: Changes made to system parameters, but not saved, will be overwritten by the data already stored in flash when entering Init Mode.** |
| **N** | Terminates Service Mode and return immediately to Normal Mode (without confirmation if system parameters have been changed compared to flash and without any hold time) |
| **I** | Terminates Service Mode and return immediately to Init Mode (without confirmation if system parameters have been changed compared to flash and without any hold time).<br>**NB: Changes made to system parameters, but not saved, will be overwritten by the data already stored in flash when entering Init Mode.** |

**Table 10-34: Error messages for x (EXIT) command**

| Error | Message | Possible reason |
|---|---|---|
| E001 | UNKOWN COMMAND | Command is incorrectly entered |
| E002 | INCORRECT NUMBER OF PARAMETERS | Too many or too few parameters, use of comma between command and first parameter |
| E003 | INVALID PARAMETER | Value of parameter outside valid range |

```
>x n
SYSTEM RETURNING TO NORMAL MODE.
```

**Figure 10-36: Example of response from x n (EXIT) command when system parameters match contents of flash**

```
>x i
SYSTEM RETURNING TO INIT MODE.
```

**Figure 10-37: Example of response from x i (EXIT) command when system parameters match contents of flash**

```
>x n
CURRENT SYSTEM PARAMETERS DO NOT MATCH FLASH CONTENT. CONFIRM EXIT(Y/N): Y
SYSTEM RETURNING TO NORMAL MODE.
```

**Figure 10-38: Example of response from x n (EXIT) command after system parameters have been changed but not saved with confirmed EXIT.**

```
>x i
CURRENT SYSTEM PARAMETERS DO NOT MATCH FLASH CONTENT. CONFIRM EXIT(Y/N): N

>
```

**Figure 10-39: Example of response from x i (EXIT) command after system parameters have been changed but not saved with confirmed not to EXIT.**

```
>x n
CURRENT SYSTEM PARAMETERS DOES NOT MATCH FLASH CONTENT. CONFIRM EXIT(Y/N): n

E003 INVALID PARAMETER

>
```

**Figure 10-40: Example of response from x n (EXIT) command after system parameters have been changed but not saved with incorrect response to confirmation.**

### 10.12 z (RESTORE TO FACTORY SETTINGS) command

General description: Restores the configuration of the unit to its factory settings.

**Table 10-35: Available z (RESTORE TO FACTORY SETTINGS) commands**

| Syntax | Response |
|---|---|
| **z<CR>** | Restores the configuration of the unit to its factory settings.<br>**NB: The restored configuration will not be permanent unless it is SAVEd to flash before EXITing Service Mode, resetting the unit or turning off power.** |
| **z<SP>,'s',<CR>** | Restores the configuration of the unit to its factory settings and saves the configuration to flash. |

**Table 10-36: Error messages for z (RESTOR TO FACTORY SETTINGS) command**

| Error | Message | Possible reason |
|---|---|---|
| E001 | UNKOWN COMMAND | Command is incorrectly entered |
| E002 | INCORRECT NUMBER OF PARAMETERS | Any characters between command and <CR> |
| E003 | INVALID PARAMETER | Value of parameter outside valid range |
| E004 | EXCEEDED MAXIMUM NUMBER OF SAVES | Warning appears when maximum number of saves has been exceeded (1000 saves). STIM210 will always attempt to save the configuration when receiving the s (SAVE)-command. |
| E005 | ERROR DURING SAVE | System parameters not successfully transferred to flash |

```
>z
RESTORE TO FACTORY SETTINGS.
CONFIRM CHANGE TO FACTORY SETTINGS (Y/N): Y

APPLYING FACTORY SETTINGS
FACTORY SETTINGS APPLIED. TO PERMANENTLY STORE THE SETTINGS, USE THE SAVE OR 'z s' COMMAND.

>
```

**Figure 10-41: Example of response from z (RESTORE TO FACTORY SETTINGS) command with no change in transmission parameters.**

```
>z
RESTORE TO FACTORY SETTINGS.
CONFIRM CHANGE TO FACTORY SETTINGS(Y/N): Y

TRANSMISSION PARAMETERS WILL BE CHANGED. PLEASE CONFIRM (Y/N): Y
THE TRANSMISSION CONFIGURATION WILL BE CHANGED TO:
TRANSMISSION PROTOCOL = 460800 bits/s, 2 STOP-BIT(S), EVEN PARITY

APPLYING FACTORY SETTINGS
```

```
FACTORY SETTINGS APPLIED. TO PERMANENTLY STORE THE SETTINGS, USE THE SAVE COMMAND.

>
```

**Figure 10-42: Example of response from z (RESTORE TO FACTORY SETTINGS) command with change in transmission parameters.**

```
>z s
RESTORE TO FACTORY SETTINGS.
CONFIRM CHANGE TO FACTORY SETTINGS(Y/N): Y

TRANSMISSION PARAMETERS WILL BE CHANGED. PLEASE CONFIRM (Y/N): Y
THE TRANSMISSION CONFIGURATION WILL BE CHANGED TO:
TRANSMISSION PROTOCOL = 460800 bits/s, 2 STOP-BIT(S), EVEN PARITY

APPLYING FACTORY SETTINGS
FACTORY SETTINGS APPLIED AND SAVED.
NUMBER OF SAVES = 26

>
```

**Figure 10-43: Example of response from z s (RESTORE TO FACTORY SETTINGS with save of configuration) command with change in transmission parameters.**

### 10.13 ? (HELP) command

General description: Help function on the available commands in Service Mode.

**Table 10-37: Available ? (HELP) commands**

| Syntax | Response |
|---|---|
| **?<CR>** | Lists the available parameters for this command |
| **?<SP><hlp><CR>** | Responds with information on the specified command |

**Table 10-38: Allowed values for <hlp> for ? (HELP) command**

| <hlp> | Result |
|---|---|
| **i** | Responds with information on the INFORMATION command |
| **a** | Responds with information on the SINGLE-SHOT MEASUREMENT command |
| **c** | Responds with information on the DIAGNOSTIC command |
| **d** | Responds with information on the DATAGRAM FORMAT command |
| **t** | Responds with information on the TRANSMISSION PARAMETERS command |
| **r** | Responds with information on the TERMINATION command |
| **u** | Responds with information on the OUTPUT UNIT command |
| **f** | Responds with information on the LP FILTER -3dB FREQUENCY command |
| **m** | Responds with information on the SAMPLE RATE command |
| **s** | Responds with information on the SAVE command |
| **x** | Responds with information on the EXIT command |
| **z** | Responds with information on the RESTORE TO FACTORY SETTINGS command |

**Table 10-39: Error messages for ? (HELP) commands**

| Error | Message | Possible reason |
|---|---|---|
| E001 | UNKOWN COMMAND | Command is incorrectly entered |
| E002 | INCORRECT NUMBER OF PARAMETERS | Too many or too few parameters, use of comma between command and first parameter |
| E003 | INVALID PARAMETER | Value of parameter outside valid range |

```
>?
AVAILABLE PARAMETERS:
i:  LISTS SPECIFIC INFORMATION
a: PERFORMS A SINGLE-SHOT MEASUREMENT
c: PERFORMS A DIAGNOSTIC OF THE UNIT
d: CHANGES DATAGRAM FORMAT
t : CHANGES TRANSMISSION PARAMETERS
r: CHANGES THE LINE TERMINATION AND DATAGRAM TERMINATION
u : CHANGES OUTPUT UNIT
f: CHANGES LP FILTER -3dB FREQUENCY
m: CHANGES SAMPLE RATE
s: SAVES CONFIGURATION DATA
z: RESTORES FACTORY SETTINGS
x: EXITS SERVICE MODE

>
```

**Figure 10-44: Example of response from ? (HELP) command**

```
>? i
i:  LISTS THE PRODUCT CONFIGURATION DATA
i s: RETURNS THE SERIAL NUMBER
i n: RETURNS THE PRODUCT NAME
i x: RETURNS THE PART NUMBER
i a: RETURNS THE AXIS CONFIGURATION
i h: RETURNS THE HW CONFIGURATION AND REVISION
i p: RETURNS THE FW CONFIGURATION AND REVISION
i m: RETURNS THE SAMPLE RATE
i f: RETURNS THE LP FILTER -3dB FREQUENCY
i d: RETURNS THE DATAGRAM FORMAT
i t: RETURNS THE TRANSMISSION PARAMETERS
i r: RETURNS THE LINE TERMINATION AND DATAGRAM TERMINATION SETTING
i u: RETURNS THE OUTPUT UNIT
i e: PRINTS THE EXTENDED ERROR INFORMATION FROM THE LAST DETECTED ERROR IN NORMAL MODE

>
```

**Figure 10-45: Example of response from ? i (HELP on INFORMATION) command**

```
>? a
a: PERFORMS A SINGLE-SHOT MEASUREMENT

>
```

**Figure 10-46: Example of response from ? a (HELP ON SINGLE-SHOT MEASUREMENT) command**

```
>? c
c: PERFORMS A DIAGNOSTIC OF THE UNIT

>
```

**Figure 10-47: Example of response from ? c (HELP on DIAGNOSTIC) command**

```
>? d
d s: CHANGES THE CONTENT OF THE DATAGRAMS IN NORMAL MODE TO STANDARD CONTENT
d e: CHANGES THE CONTENT OF THE DATAGRAMS IN NORMAL MODE TO EXTENDED CONTENT
d j: CHANGES THE CONTENT OF THE DATAGRAMS IN NORMAL MODE TO RATE AND TEMPERATURE
d k: CHANGES THE CONTENT OF THE DATAGRAMS IN NORMAL MODE TO RATE AND COUNTER
d l: CHANGES THE CONTENT OF THE DATAGRAMS IN NORMAL MODE TO RATE AND LATENCY
d m: CHANGES THE CONTENT OF THE DATAGRAMS IN NORMAL MODE TO RATE, COUNTER AND LATENCY
d n: CHANGES THE CONTENT OF THE DATAGRAMS IN NORMAL MODE TO RATE, TEMPERATURE AND COUNTER
d o: CHANGES THE CONTENT OF THE DATAGRAMS IN NORMAL MODE TO RATE, TEMPERATURE AND LATENCY
d p: CHANGES THE CONTENT OF THE DATAGRAMS IN NORMAL MODE TO RATE, TEMPERATURE, COUNTER AND LATENCY

>
```

**Figure 10-48: Example of response from ? d (HELP on DATAGRAM FORMAT) command**

```
? t
t <bit-rate>: CHANGES THE BIT-RATE [bits/s]
t <bit-rate>,<stop-bits>,<parity>: CHANGES THE BIT-RATE [bits/s], NUMBER OF STOP-BITS AND PARITY
  ALLOWED VALUES FOR <bit-rate>: 1500 TO 7500000
<bit-rate> MUST ONLY BE INCLUDED WHEN <bit-rate code> = f
  ALLOWED VALUES FOR <stop-bits>: 1 AND 2
  ALLOWED VALUES FOR <parity>: n (=NONE), e (=EVEN) AND o (=ODD)

>
```

**Figure 10-49: Example of response from ? t (HELP on TRANSMISSION PARAMETERS) command**

```
>? r
r 0: TURNS LINE TERMINATION = OFF AND DATAGRAM TERMINATION = NONE
r 1: TURNS LINE TERMINATION = ON AND DATAGRAM TERMINATION = NONE
r 2: TURNS LINE TERMINATION = OFF AND DATAGRAM TERMINATION = <CR><LF>
r 3: TURNS LINE TERMINATION = ON AND DATAGRAM TERMINATION = <CR><LF>
```

```
>
```

**Figure 10-50: Example of response from ? r (HELP on TERMINATION) command**

```
>? u
u a: CHANGES OUTPUT UNIT TO ANGULAR RATE [°/s]
u i: CHANGES OUTPUT UNIT TO INCREMENTAL ANGLE [°/sample]
u m: CHANGES OUTPUT UNIT TO AVERAGE ANGULAR RATE [°/s]
u s: CHANGES OUTPUT UNIT TO INTEGRATED ANGLE [°]
>
```

**Figure 10-51: Example of response from ? u (HELP on OUTPUT UNIT) command**

```
>? f
f <-3dBfreq>: CHANGES THE LP FILTER -3dB FREQUENCY [Hz] FOR ALL AXES
f <-3dBfreq>,<axis>: CHANGES THE LP FILTER -3dB FREQUENCY [Hz] FOR A SPECIFIC AXIS
   ALLOWED VALUES FOR <-3dBfreq> = 16, 33, 66, 131 AND 262
   ALLOWED VALUES FOR <axis> = x, y AND z

>
```

**Figure 10-52: Example of response from ? f (HELP on LP FILTER -3dB FREQUENCY) command**

```
>? m
m <sampl.freq>: CHANGES THE SAMPLE RATE [samples/s]
   ALLOWED VALUES FOR <sampl.freq> = 125, 250, 500, 1000, 2000 AND 0 (EXTERNAL TRIGGER)

>
```

**Figure 10-53: Example of response from ? m (HELP on SAMPLE RATE) command**

```
>? s
s: SAVES SYSTEM PARAMETERS TO FLASH

>
```

**Figure 10-54: Example of response from ? s (HELP on SAVE) command**

```
>? z
z: RESTORES FACTORY SETTINGS

>
```

**Figure 10-55: Example of response from ? z (HELP on RESTORES TO FACTORY SETTINGS) command**

```
>? x
x n: EXITS SERVICE MODE AND RETURNS TO NORMAL MODE
x i: EXITS SERVICE MODE AND RETURNS TO INIT MODE
x N: EXITS SERVICE MODE AND RETURNS IMMEDIATELY TO NORMAL MODE
x I: EXITS SERVICE MODE AND RETURNS IMMEDIATELY TO INIT MODE
NB: NON-SAVED SYSTEM PARAMETERS WILL BE OVERWRITTEN BY STORED CONTENT IN FLASH WHEN EXITING TO INIT MODE

>
```

**Figure 10-56: Example of response from ? x (HELP on EXIT) command**

## 11 MARKING

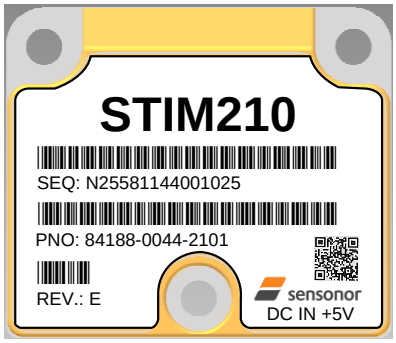


**Figure 11-1: Example of marking of STIM210**

## 12 PART NUMBER / ORDERING INFORMATION

Configuration options in **bold** letters are the standard option.

| Main configuration | - | Output unit | Data-gram | Sample rate | Band-width | - | Bit-rate | Stop-bits | Parity | Termination |
|---|---|---|---|---|---|---|---|---|---|---|

| Axes: |
|---|
| **84188 = full 3-axis** |
| 84190 = 2-axis in X+Y directions |
| 84192 = 2-axis in X+Z directions |
| 84194 = 2-axis in Y+Z directions |
| 84196 = 1-axis in X-direction |
| 84198 = 1-axis in Y-direction |
| 84200 = 1-axis in Z-direction |

| Output unit: |
|---|
| **0 = Angular Rate** |
| 1 = Incremental Angle |
| 2 = Average Angular Rate |
| 3 = Integrated Angle |

| Datagram content: |
|---|
| **0 = Standard** |
| 1 = Extended |
| 3 = Rate and temperature |
| 4 = Rate and counter |
| 5 = Rate and latency |
| 6 = Rate, counter and latency |
| 7 = Rate, temperature and counter |
| 8 = Rate, temperature and latency |
| 9 = Rate, temperature, counter and latency |

| Sample rate: |
|---|
| 0 = 125 samples/s |
| 1 = 250 samples/s |
| 2 = 500 samples/s |
| **3 = 1000 samples/s** |
| 4 = 2000 samples/s |
| 5 = External trigger |

| Bandwidth: |
|---|
| 0 = 16Hz |
| 1 = 33Hz |
| 2 = 66Hz |
| 3 = 131Hz |
| **4 = 262Hz** |

| Bit-rate: |
|---|
| 0 = 374400 bits/s |
| **1 = 460800 bits/s** |
| 2 = 921600 bits/s |
| 3 = 1843200 bits/s |
| 7 = User-defined* |

*) Bit-rate must be specified. See section 10.5 for limitations

| Stop-bits: |
|---|
| **1 = 1 stop-bit** |
| 2 = 2 stop-bits |

| Parity: |
|---|
| **0 = no parity** |
| 1 = odd parity |
| 2 = even parity |

| | Line | Datagram |
|---|---|---|
| 0 | OFF | None |
| **1** | **ON** | **None** |
| 2 | OFF | <CR><LF> |
| 3 | ON | <CR><LF> |

Example: part number 84188-0032-1211 has the following configuration:

- X, Y and Z axis
- Angular Rate Output [°/s]
- Standard Datagram
- 1000 samples/s
- -3dB bandwidth = 66Hz
- Bit-rate = 460800 bits/s
- 2 stop-bits
- Odd parity
- Line termination ON
- No datagram termination

**NOTES**

Information furnished by Sensonor is believed to be accurate and reliable. However, no responsibility is assumed by Sensonor for its use, nor for any infringements of patents or other rights of third parties that may result from its use. Sensonor reserves the right to make changes without further notice to any products herein. Sensonor makes no warranty, representation or guarantee regarding the suitability of its products for any particular purpose, nor does Sensonor assume any liability arising out of the application or use of any product or circuit, and specifically disclaims any and all liability, including without limitation consequential or incidental damages. No license is granted by implication or otherwise under any patent or patent rights of Sensonor. Trademarks and registered trademarks are the property of their respective owners. Sensonor products are not intended for any application in which the failure of the Sensonor product could create a situation where personal injury or death may occur. Should Buyer purchase or use Sensonor products for any such unintended or unauthorized application, Buyer shall indemnify and hold Sensonor and its officers, employees, subsidiaries, affiliates, and distributors harmless against all claims, costs, damages, and expenses, and reasonable legal fees arising out of, directly or indirectly, any claim of personal injury or death associated with such unintended or unauthorized use, even if such claim alleges that Sensonor was negligent regarding the design or manufacture of the part.

**Sensonor AS**
Phone: +47 3303 5000 - Fax: +47 3303 5005
sales@sensonor.com **www.sensonor.com**